UNCLASSIFIED

LIBRARY COPY NO. 7

SECRET

CIC # 6284

7 & 9

OPERATION SANDSTONE

NUCLEAR EXPLOSIONS

1948

#49 1905 DNA OFOT

Classification (Cancelled) Changed to UNCLASSIFIED
By Authority of CNL B-F-W 9- 11/6/57
By [illegible] Date 9 Oct. 57

Reviewed by DOE/OC 8/8/79

UNCLASSIFIED

RESTRICTED DATA
ATOMIC ENERGY ACT OF 1946

Statement A
Approved for public release;
Distribution unlimited.

RESTRICTED DATA
ATOMIC ENERGY ACT OF 1946
[illegible] ACCEPTANCE NOT REQUIRED
[illegible]

UNCLASSIFIED

SECRET

UNCLASSIFIED

UNCLASSIFIED SECRET

RESTRICTED DATA

This document contains restricted data as defined in the Atomic Energy Act of 1946.

THIS DOCUMENT CONSISTS OF 300 PAGES

NO 7 OF 20 COPIES, SERIES A

LIBRARY TECHNICAL FILE

CLASSIFIED 20-10

SUBJECT 43

Sandstone REPORT

TG 7.6 OPERATIONS

OPERATION REPORT PHASES A, B, C, D, E

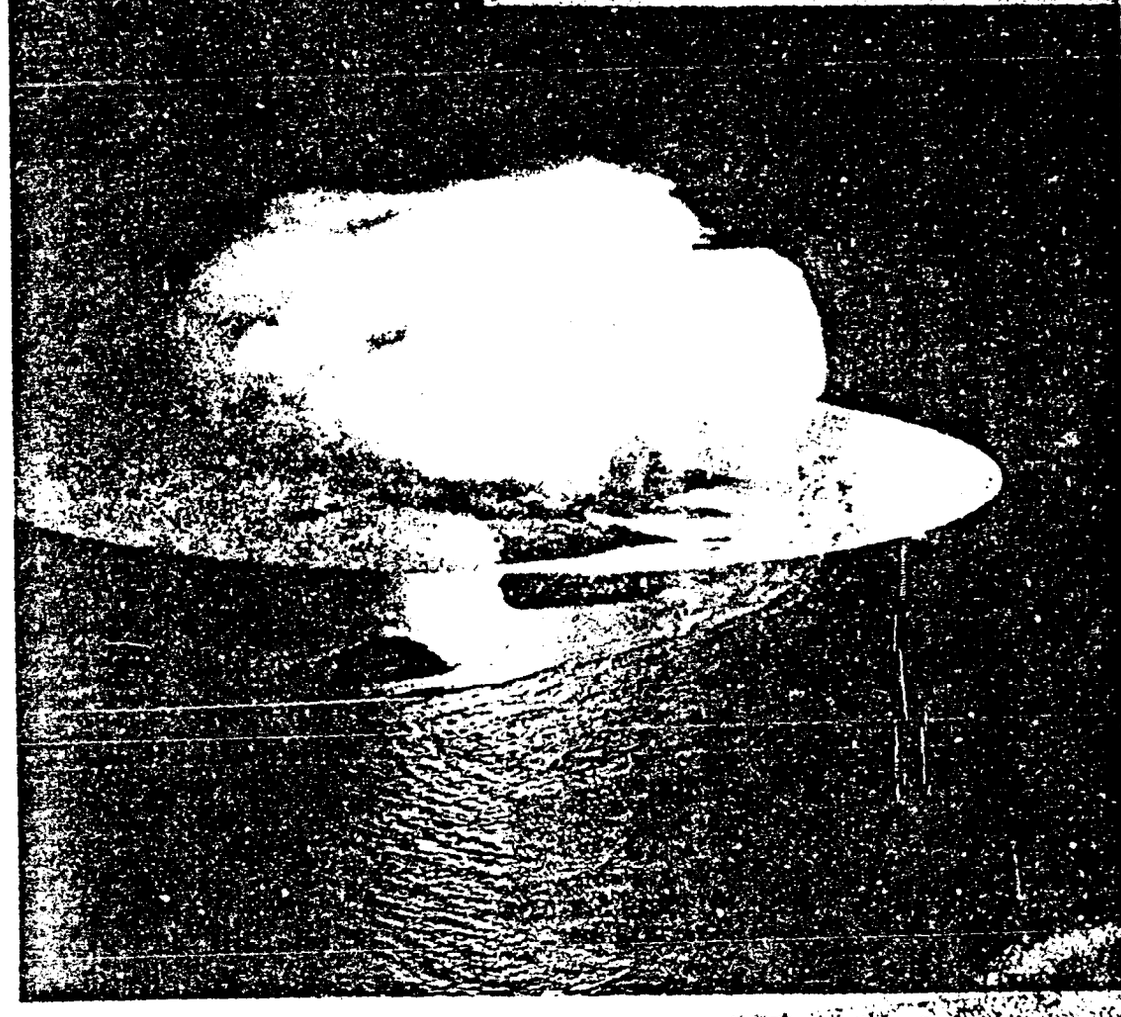

UNCLASSIFIED

SECRET

This document contains information affecting the National Defense of the United States within the meaning of the espionage laws, Title 18, U.S.C., Sections 793 and 794. Its transmission or the revelation of its contents in any manner to an unauthorized person is prohibited by law. Violation may result in severe criminal penalties under applicable Federal laws.

UNCLASSIFIED

HEADQUARTERS
TASK GROUP 7.6

20 March 1948

OPERATIONAL REPORT

PHASES A and B

CHAPTER 1

Introduction.

In August of 1947 General James McCormack, Jr., the Director, and Captain James Russell, USN, both of Military Applications Division, AEC, called Colonel James P. Cooney, MC, USA of the Office of the Surgeon General for a conference at the office of the AEC, and informed him that certain atomic tests would be conducted in the future at some site to be chosen in the Pacific area. They stated that his name had been suggested by Dr. Norris E. Bradbury of Los Alamos to head radiological safety operations. Colonel Cooney was asked if he would be willing to assume this responsibility, and he stated he would be willing to help in any way possible.

In the latter part of September Colonel Cooney was ordered to report to Lt. General John E. Hull for a personal interview at which time it was confirmed that Colonel Cooney was willing to assume responsibility for radiological safety operations, and that the Surgeon General had concurred in his release. Accordingly, Lt. General Hull stated that orders would be issued making the appointment official.

General Orders Number 2, Headquarters, Joint Task Force SEVEN, Washington, D. C., dated 18 October 1947 announced that Colonel Cooney would be the Radiological Safety Officer. He was charged with the

responsibility of organizing a Joint Radiological Safety Group within JTF-7 for the operational detection and determination of intensities and types of radioactivity, and the protection of personnel from its hazards.

In October 1947 Colonel Cooney met with Captain Frank I. Winant, Jr., USN, Colonel Robert N. Isbell, CmlC, USAF, Dr. Herbert Scoville, Jr., Lt. Colonel Karl H. Houghton, MC, USA, and Major William W. Stone, CmlC, USA all of the Armed Forces Special Weapons Project at the Pentagon in Washington. At this meeting Colonel Cooney outlined the proposed plan for the atomic tests and announced that a Radiological Safety Group would be formed.

On 18 October 1947 General Orders Number 3, Headquarters, Joint Task Force SEVEN, Washington, D. C. announced the establishment of the Joint Radiological Safety Group, Task Group 7.6

For a period of about three weeks during the month of October 1947 Colonel Cooney accompanied Lt. General Hull and his party on a survey of areas in the Pacific. This was in connection with the selection of particular ZERO islands, and Colonel Cooney accompanied the group to consider radiological safety aspects.

In November 1947 the Joint Proof test Committee submitted the "green paper" to the Joint Chiefs of Staff. A certain portion of this paper, dealing with fundamental radiological safety rules to be employed in SANDSTONE, was drafted by the Staff of the Radiological Safety Group. This group originally consisted of Colonel Cooney, Commander Winant, Dr. Scoville, Lt. Colonel Houghton, Major Stone, and Lt. Commander Campbell, USN of AFSWP. The primary rule included in this paper was that Commander, JTF-7 would be responsible for

radiological safety of all personnel in the Task Force, both military and civilian. Mr. David E. Lilienthal, Chairman of the AEC, in replying to the paper requested that in certain instances the scientific Director be authorized to establish radiological safety requirements for AEC personnel in connection with certain critical tests. The RadSafe staff group then prepared a dissent which was forwarded by Lieut. General Hull and approved by the Joint Chiefs of Staff.

In December this same Joint RadSafe Group, less Lt. Commander Campbell and now including Commander Thomas R. Fonick, USN of the AFSWP, with constructive criticisms by Brigadier General James deF. Barker, prepared the radiological safety plan which was to become Annex "J" of Field Order Number 1, Joint Task Force SEVEN.

Considerable discussion centered around paragraph 1 of Annex "J" which states that radiological safety of all personnel is a command responsibility. This is considered to be a fundamental rule in radiological safety work and places the monitor in an advisory capacity to the leader of any party working in a radioactive area. However, there were certain rules written into the plan in various places which greatly strengthened the position of the monitor by removing from the party leader any right to review the monitor's findings concerning hazards in radioactive areas.

After considerable deliberation and discussion it was decided that the duties of Colonel Cooney as a member of the Joint Task Force Staff would be of such magnitude that it would not be feasible for him to command the Joint Radiological Safety Group, whereupon Captain (now Commander) Frank I. Winant, Jr., USN was announced in General Orders Number 7, UTF-7, dated 22 December 1947 as Commander, Joint Radiological Safety Group, Task Group 7.6

The establishment of the Joint Radiological Safety Group as a separate command represents an improvement to the plan utilized in Operation CROSSROADS to meet the safety problems. It was not the intent that the Commander of Task Group 7.6 should formulate policy but rather that he should exercise control of a functional group composed of Army, Navy, Air Force, Public Health and various civilian personnel. By carrying out the safety policy within a separate activity it was felt that an unhampered coordination of effort could be accomplished without needlessly impeding the over-all operation.

CHAPTER 2

Personnel Procurement.

On 1 October 1947 Colonel Cooney and Captain Winant began considering the problems of obtaining personnel for the Radiological Safety Group. It was apparent that a small group of experienced personnel would be needed to conduct the planning, technical, and operational functions. These experienced personnel would have to be drawn from other important assignments and in general would come from the AFSWP and AEC. It was decided that this staff group should be as small as possible in order not to interfere unnecessarily with concurrent important work. It was also felt highly desirable that the majority of the group should consist of graduates of the radiological safety schools at Treasure Island and Edgewood Arsenal. The non-staff or monitor personnel would be picked from those having the best records at the radiological safety schools. It was desirable that all branches of the services have representatives in the Radiological Safety Group, thereby each service should benefit by the experience of the operation.

On 17 October 1947 a memorandum was sent to the J-1 Section, JTF-7 and constituted the basic request for personnel. Six officers and one civilian were requested immediately for the duration of the operation. These personnel, all from Headquarters, AFSWP in Washington were needed to accomplish the planning stage of the operation, and to form a nucleus for the Radiological Safety Group. In addition, eight other specially qualified officers were requested by name to report by 15 January 1948. Procurement of these officers was given highest priority because of the amount of previous experience each

had had in this work. Monitors for the operation were chosen from preferential lists prepared from the records of radiological safety school graduates. In general they were picked on the basis of their class standing. The break-down, respectively, from the various services furnishing these monitors is as follows:

	Principals	*Alternates
Army	13	14
Navy	13	26
Air Force	10	15
Marine Corps	1	1
USPHS	1	0

* When alert orders were finally issued for those principals definitely selected, 3 or 4 alternates from each service were alerted at the same time.

Enlisted requirements were four ETM's, well qualified in electronic instrument repair; five photographer's mates, with much experience in film development for work in photographic dosimetry; six yeomen and two storekeepers.

Also at this time arrangements were negotiated for the services of eight civilians from the AEC, other government agencies and from universities. Three of these were to furnish radiological safety and medical legal advice to Colonel Cooney. The remainder are instrument specialists and scientists believed necessary for the support of the operation.

During the period, 1 November to 15 December 1947, numerous discussions were held with the Career Management Sections of the various branches and services of the Army and Air Force and with the Bureau of Naval Personnel. It was found that many of the personnel requested in the basic memorandum were occupying key positions in their own organizations and could not reasonably be made available.

Numerous substitutions and a few additions were made as the need arose. During this period the personnel needs were in a more or less fluid status because many of the projects were still in formative stages and a determination of absolute needs could not be definitely anticipated.

Meanwhile availability statements were coming back from the Air Force and lists were being forwarded to Career Management Units requesting that the personnel be earmarked for Operation SANDSTONE.

At this period it was estimated that the personnel requirements for the Radiological Safety Group would be fifty officers, seventeen enlisted men and five civilians. Ten of the officers would be air monitors, whose duty it would be to advise plane crews that were to be in the air at the time of the shot concerning radioactive intensities and to indicate paths of least intensity for entry and exit. They would also distribute film badges to plane personnel and collect them upon completion of the mission. These monitors would be based at Kwajalein after arrival at the test site under command of Colonel Isbell. In addition to the previously requisitioned personnel, the services of Lt. Colonel Joseph J. Cody, Jr., USAF were requested by CTG-7.6 Also, two additional flight surgeons were requested from the AFSWP.

The original plan contemplated the use of one RadSafe monitor to accompany each party working on a project with a reserve of about 20% additional monitors. However, as the planning progressed additional projects were added necessitating a revision of monitor and technician requirements. As a result of this revision it was considered

there was need for seventy-two officers and civilians, and seventeen enlisted men. Later, about 15 December 1947, the troop list requirements for the CVE-115 (ship designated to transport personnel of TG-7.6) were modified to seventy-five officers and civilians and twenty-six enlisted.

In December 1947 "Q" clearances were initiated for personnel of the Task Group at the request of the J-2 Section of the Task Force. On 15 January 194 TG-7.6 indicated the requirements, by name, of all personnel of TG-7.6 entitled to RED or GREEN badges.

About 22 January 1948 it was realized that the requirements for air monitors had been markedly underestimated, therefore the services of nine officers, Medical Service Corps, USAF were requested in addition to previous requirements indications.

Special Physical Examinations.

Early in October it was decided that all individuals of JTF-7 who would be participating in work with or around radioactive material would require special physical examinations prior to leaving the United States. Examinations would consist of a complete physical to include chest X-ray, urinalysis, and complete blood count (red and white count, hemoglobin, and differential). Forms were made for these special physical examinations and sent to the various agencies within the Task Force for distribution to individuals concerned. If an individual had undergone a complete physical examination within the previous six months no further examination other than blood count, urinalysis and chest X-ray would be required.

[redacted]

Exposure Policy.

A Standard Operating Procedure on exposure, what rest periods would be required in the event of over-exposure, and what would actually constitute over-exposure, was developed by Colonel Cooney and Lt. Colonel Houghton. They also established exposure policies with the basic formula at 0.1 roentgen per twenty-four hours as maximum except for certain specific urgent missions where exposure up to 3 roentgens would be permitted. In a conference with Dr. Darol K. Froman of the AEC, Test Scientific Director, it was determined that all missions involving the maximum 3r (3 roentgens) exposure would have to be personally approved by Dr. Froman and Colonel Cooney. No exposure above 3r would be permitted unless approved by Commander, JTF-7.

[redacted]

CHAPTER 3

Instrument and Logistical Data.

At a meeting on 18 September 1947 called by Colonel Cooney a subcommittee consisting of Commander H. L. Andrews, USPHS, Lt. Commander Campbell, and Dr. R. E. Lapp, Research and Development Board, was formed to consider types and quantities of instruments required for the operation. It was estimated that sufficient radiological safety instruments for use by twenty-five monitors as a maximum would be needed for from one to three tests. The subcommittee was instructed to submit an interim report, preferably within one week. The subcommittee's first meeting took place about 20 September 1947 at which time the various types of instruments then available were discussed. Current information on instruments in the process of development was subsequently obtained by a rapid survey of work then going on in the Boston, Cleveland, and Chicago areas.

On 22 September the subcommittee presented an interim report, the basic recommendations being as follows:

A. Geiger-Mueller Survey Instruments		*Price	Quantity
a. Instrument Development Labs	#2610	$280	20
b. Geophysical Instrument Co.	-	220	20
c. North American Philips Co.	-	270	20
d. Sylvania (NavDept)**	-		20
e. National Technical Labs	MX-5	250	20
f. Victoreen Instrument Co.	263	475	50
		$42,150	150

*Approximate only — to be revised
**Not included in total price

[redacted]

14

			Price	Quantity
B.	Ionization Chamber Survey Instruments			
	a. National Technical Labs	#MX-2	$300	20
	b. Rauland Radio Co.	Zeus	300	20
	c. Victoreen Instrument Co.	247	500	60
			$42,000	100
C.	Direct Reading Dosimeters (Pocket Electrometers)			
	a. Landsverk Electrometer Co.	#L-200	$ 35	500
		L-Sp.	50	50
		L-300	40	50
			$22,000	600
D.	Direct Reading Dosimeters (Vacuum Tube Integration)			
	a. Victoreen Instrument Co. (Proteximeter)		225	25
			5,625	25
	Total		111,775	900

In addition to visiting instrument companies in the eastern areas of the United States, the subcommittee contacted companies in other parts of the country to determine the status of their development work in this field. Contact was made with interested agencies of the Army, Navy and Air Force as well as the Atomic Energy Commission to determine what work of related nature was being pursued by necessary agencies.

As well as making recommendations for the purchase of instruments then commercially available, the committee drew up tentative specifications for some instruments incorporating features not present in instruments then in production. These recommendations were as follows:

A. The Victoreen-247 ion chamber meter has four scale readings, 2.5mr per hour full scale, 1 X, 10 X, 100 X, and 1000 X. It was desired to obtain 10 instruments modified to have five scale ranges, 2.5 mr per hour full scale, 1 X, 10 X, 100 X, 1000 X, and 10,000 X. The instrument company did not consider this practical in accordance with their current production design so a four-scale instrument reading 10 X, 100 X, 1000 X, and 10,000 X was agreed upon.

B. The Rauland Corporation instrument is a portable alpha, beta, gamma meter. It was the subcommittee's recommendation that this instrument be modified to gamma reading only. It was further recommended that the instrument be placed in a metal case. These modifications, especially removal of the alpha-beta feature, would simplify the instrument and perhaps effect a reduction in price.

As a result of these specifications the Model 247-A (modified) manufactured by the Victoreen Instrument Company, Model MX-6 manufactured by the National Technical Laboratories, and the modified Zeus manufactured by the Rauland Corporation, were constructed specially for this operation. High range pocket dosimeters (10r and 50r) were constructed specially for this operation by the Kelly-Koett Company and the A. O. Beckman Co. Standard range dosimeters (0-.2r) were obtained from the Cambridge Instrument Company which manufactured them primarily as a result of stimulation by the subcommittee.

A serious bottle-neck developed with respect to Landsverk electrometers. This resulted from indecision on the part of Landsverk as to whether to expand his existing plant in Chicago or combine with the Kelly-Koett Corporation of Covington, Kentucky. If he continued with his present business it would be possible that five-hundred 0.2r meters could be obtained from parts on hand by 15 January 1948. On the other hand there was no promise of delivery on the higher range meters and he wanted a development or cost-plus contract to do the work. It appeared that immediate action was needed and it was the committee's recommendation that an order for less than five-hundred 0.2r meters be placed so that Landsverk might devote his time to the delivery of the higher range meters.

Delivery of the A. O. Beckman electrometers by 15 January was not considered possible, but an order was recommended for the purpose of stimulating production sources in addition to those of Lundaverk.

The quantities of survey instruments recommended did not include allowance for more than six manned aircraft. Should more aircraft be involved it was recommended that the following quantities and types of instruments be procured for each aircraft: 1 ion chamber survey meter, 2 GM survey meters and 1 protoximeter.

It was further recommended that 40 alpha measuring instruments be procured; also 20 additional (un-modified) Rauland-Zeus, and 20 AEC designed Pluto meters, Model 356 from a lot of 125 manufactured by the Victoreen Company and delivered approximately July 1947 to the Atomic Energy Commission.

In October 1947 the Bureau of Ships had under development between the Naval Research Laboratory and the Sylvania Electric Products Company a GM survey meter of reported advanced design. It was decided that 25 of these meters should be taken. Commander Gould Hunter who was responsible for the BuShips development program made strong recommendations against the use of the BuShips instrument because he feared unfavorable prejudices would be created by the use of an undeveloped instrument.

It was further decided, since all instruments listed in the final subcommittee report were new and untried, that 25 Victoreen 247 ion chamber survey meters should be taken. (Only 12 of these instruments were received).

Final report of the subcommittee covered only survey instruments and did not include any instruments required for laboratory purposes.

In general the recommendations of the subcommittee were accepted but in some instances quantities were increased, notably on the model 263-A GM counter and the Model 247-A ion chamber instruments manufactured by the Victoreen Instrument Company. These increases were felt desirable since the two instruments were modifications of previous designs which were considered reasonably satisfactory and it was felt that health protection should not rest wholly on indications obtained from new, untried meters. As soon as the requirements were firmly established, orders for these instruments were placed through the AEC. Delivery dates were short but in almost every case the manufacturers were very cooperative in attempting to meet them.

On 8 October 1947 Colonel Cooney directed that with some modifications the list of instruments recommended by the subcommittee be turned over to the AEC for procurement. Major Maxwell Dauer, Military Applications Division, AEC, was designated for liaison by AEC. A letter was sent to Major Dauer containing lists of instruments and specifications for spare parts and indicating that additional lists would be forthcoming. At that time delivery was desired by 1 January 1948 to the Oakland Army Base, Oakland, California. A request was made that one of each portable survey instrument be delivered to Lt. Commander Campbell at the AFSWP for examination by interested parties. A list of specifications for spare parts was compiled by Lt. Commander Campbell with the advice of Commander Andrews in accordance with Navy specifications as follows:

[redacted]

Navy Dept Specification 42-B-9
Boxes, Spare Parts, Electrical
and Mechanical (Shipboard Use)

BuShips, Radio Division, Specification RE 13A 937
General Specifications for Packaging and Packing,
Navy Radio, Radar and Sonar Equipment

Army-Navy General Specification for Packaging and
Packing for Overseas Shipment - U.S. Navy Speci-
fication 39-P-16

Joint Army-Navy Specification JAN-1 for Radio
Electron Tubes

BuShips, Radio Division Specification XA-8610
Listing parts and spare parts.

In drawing up the specifications, consideration was given to the particular types of instruments being obtained and their probable use under tropical climate conditions; e.g. all portable electronic survey instruments were to be provided with loose transparent plastic rain covers.

On 5 November 1947 a memorandum for Colonel Cooney from Major Dauer indicated that the survey instruments which had been requested were under procurement by the AEC. Dust collectors of improved design were being produced by the Mines Safety Appliance Company. Ten-thousand film badges with range, 0-10 roentgens were being supplied by the Eastman Kodak Company which had also promised information concerning the total range on casualty film badges. It was learned that the Ansco-Sweet densitometers were not available and Major Dauer suggested substitution by either a photo-volt or Weston Densitometer.

In November 1947, Colonel Cooney, Captain Winant, Lt. Colonel Houghton, Commander Andrews and Lt. Commander Campbell made a trip

from Washington, D. C. to Annapolis, Maryland for the purpose of inspecting a CVE similar to the one which was to be used to transport TG-7.6. It was decided that the after pilot ready room would be the most desirable place for the instrument repair shop because of its space, air-conditioning and access to the hanger deck. Examination of the ship's photographic laboratory indicated that it would be adequate for film badge processing if the temperature could be controlled near 68° F. The air-plot and CIC spaces appeared suitable as monitor control centers. As soon as it was decided that a ship of the type examined could be used on the mission a letter requesting that necessary modifications be made on the assigned ship was sent to the Chief of Naval Operations on 17 November 1947.

During the week of 1 December 1947 Dr. Lapp and Mr. Dahl, AEC, made a visit to the National Technical Laboratories in South Pasadena, California. There it was discovered that the ion chamber survey instrument being manufactured by them was the model MX-2 which was not the field instrument desired for the proposed operation. Dr. A. O. Beckman, president of this company, indicated that his concern could produce a much superior instrument and requested specifications. On approximately 8 December discussions were held among Dr. Lapp, Mr. Dahl, Dr. Andrews and Lt. Commander Campbell, and the recommendations formalizing this request were set forth in a memorandum to Major Dauer on 22 December 1947. Changes were as follows:

Model MX-2	--	Reduced quantity from 20 to 10
Model MX-6 (New instrument)	--	Ordered 20

The Model LX-6 was to be manufactured in accordance with the following specifications:

a. Weight; 10 lbs. maximum.
b. Maximum case dimensions; 4" x 6" x 10".
c. Handle; hinged, polished unpainted metal or plastic.
d. Case to be metal, heavy enough for field use. Surface to be smooth for ease of decontamination; anodized, lacquered or smooth paint finish (no crackel-finish).
e. Case to be water-proof tested under 5 feet of water for two hours.
f. Detector component to be an ionization chamber containing sealed air at approximately 740 mm mercury pressure at 20° C.
g. The instrument to be tropicalized in accordance with standard Army-Navy specifications.

Following were the circuit requirements:

a. It must be possible to check the zero setting in a field equal to the maximum radiation measured by the instruments.
b. After 60 seconds warm-up period, the zero drift to be less than 5% of full scale per hour on any range.
c. Five ranges of sensitivity were requested:
   1. 0-4 mr/hr
   2. 0-40 mr/hr
   3. 0-400 mr/hr
   4. 0-4000 mr/hr
   5. 0-40,000 mr/hr
d. The microphonics to be held to a minimum. On any one of three one-inch drops produced by suddenly pulling a one-inch board from under one end of the instrument the meter reading would not go over one-half full scale on any range of sensitivity.
e. The instrument was to be calibrated by gamma rays from radium and to conform to the sensitivities specified in (c) above within an average of 10% of full scale at any point on the scale.
f. The circuit to be so designed that after switching from one range to another not more than 10 seconds would be required to reach 90% of the final reading.

g. The instrument to be sensitive to gamma radiation and the wall of the chamber to be composed of a material with the atomic number less than ten such that the instrument would be wave length independent from all X and gamma radiation with energies above 5 Kvp, and beta particles with energies less than 1.0 MEV to be excluded.
h. The circuit time constant to be such that 90% of the final reading of the instrument would be reached within 10 seconds or less.
i. The instrument to operate under the above requirements over ranges of temperatures from minus 5° C to 70° C and with the relative humidity of 95% for a period of twenty-four hours.
j. The instruments to be battery operated with a battery life which would provide operation for 30 days at a rate of 8 hours continuous each day. Batteries to be easily checked and replaced. Standard Army-Navy types of batteries suitable for tropical use were desired.

It was realized that some of the above specifications would not be completely met and some relaxation of the requirements were anticipated.

On 6 January 1948 a letter was received from Mr. Adrian Dahl (AEC) who had been attempting to place the contract for the MX-6 with the National Technical Laboratories. The National Technical Laboratories requested the following changes be made in the specifications outlined above:

a. The warm-up period should be increased from one minute to two minutes.
b. The microphonic specifications be modified to include a zero shift of not more than 2% of full scale on any one of the drops during the microphonics tests.
c. Range of temperature from minus 5° C to 50° C with operation up to and above 70° C desired.
d. The battery life to be 25 days at a rate of 8 hours continuous each day.
e. The maximum exposure readable on the proposed instrument would be 5000 mr per hour.

The above changes in specifications were agreed to by all concerned.

Various items of supply covering a wide range of material were under procurement during this period (see Appendix A).

Colonel Cooney expressed appreciation for the outstanding manner in which the instrument committee, namely, Dr. Andrews, Dr. Lapp, and Lt. Commander Campbell, determined numbers and types of instruments to be used, and further expressed appreciation for the outstanding service of Major Dauer, Mr. Bray, and Mr. Dahl in their procurement. If it were not for their outstanding effort it would have been impossible to procure this large number of instruments in such a short time.

About 1 January 1948 Commander, JTF-7 designated Commander Winant as loading coordinator of CVE-115, both for material and personnel. On 15 January 1948 Lt. Commander Campbell established an office in Naval Shipyard, Terminal Island, Long Beach, California as West Coast representative of Commander, Task Group 7.6 and exercised active supervision in outfitting the Task Group shops on the CVE-115. He also acted as receiving officer for radiological safety material which had been shipped to Terminal Island, California. A small group of enlisted personnel reported to Terminal Island at this time and assisted Lt. Commander Campbell in the inspection of all material upon receipt.

[redacted]

UNCLASSIFIED

CHAPTER 4

TECHNICAL MEASUREMENTS

Introduction of Projects.

As a result of analysis made on CROSSROADS technical information and attempts to apply these data to practical situations it was indicated that much additional information was needed to adequately prepare for defense against atomic bomb attacks.

On 8 September 1947 Dr. Herbert Scoville, Jr. and Major W. W. Stone, Jr., CmlC, USA, made a rough outline of a program of measurements which would be desirable in any future tests. These were discussed by Captain Winant and Dr. Scoville with Captain James S. Russell, USN, of the AEC, and later with Admiral Parsons and Captain Thomas Hill, USN. Captain Winant, with the approval of Admiral Parsons, suggested that Dr. Scoville be made available to work on planning for the forthcoming tests. Arrangements were made to submit a smooth copy of this program and discuss it with Dr. Norris E. Bradbury of Los Alamos on the following day.

On 9 September 1947 the program was submitted to Dr. Bradbury and discussed at a meeting at which Dr. Bradbury, Captain Russell, Captain Hill, Dr. Scoville, and Major Stone were present. Following is a list of projects proposed at this time:

1. Gamma Radiation Measurements.
   a. Gamma dosage versus distance
   b. Gamma ray spectrum
   c. Gamma intensity versus time
   d. Size and location of source
   e. Absorption by thick and angular shields

[redacted]

2. Neutrons.
   a. Neutron spectrum
   b. Neutron flux versus distance
   c. Neutron absorption and scattering
   d. Neutron flux versus time

3. Residual contamination
   a. Direct contamination
   b. Downwind fall-out

4. Radioactive Cloud
   a. Air sampling
   b. Radiation field from cloud
   c. Long range detection

At this meeting Dr. Bradbury raised the question of who would be available to undertake the work outlined in this program. Although it was considered desirable to have Dr. Gerhard Dessauer undertake the gamma radiation measurements, the AEC felt it was inadvisable to request his services from the General Electric Company at this time. Dr. Bradbury agreed to take the program back to Los Alamos for discussion of possible means of implementation.

On 29 September 1947 an estimate of the equipment and personnel which would be needed to implement the program on gamma radiation measurements was prepared by Dr. Scoville. This was discussed with Colonel Cooney and with Captain Russell. A meeting was held about 1 October attended by Dr. Froman, Colonel Cooney, Dr. Clark, Dr. Scoville, Dr. Francis Shonka, of the University of Chicago, and Dr. Alvin C. Graves, of the University of California Scientific Laboratory, Los Alamos. It was agreed that the Radiological Safety Group under Colonel Cooney would measure the gamma radiation versus distance. It was proposed that Dr. Shonka organize a group to measure the gamma-ray spectrum which was of particular interest to the scientists at Los Alamos.

Although the AEC expressed little interest in additional projects, the Scientific Director agreed to consider these particular projects provided the AFSWP could furnish necessary personnel to carry them out.

At Colonel Cooney's suggestion the AFSWP therefore took steps to contact Dr. Lauriston Taylor, National Bureau of Standards to see if he would undertake the measurement of the gamma intensity versus time. A meeting was held with Dr. Taylor, Dr. Andrews, Dr. Graves, Colonel Cooney and Dr. Scoville to discuss this project on the following day. Dr. Taylor agreed to look into the possibilities and submit a program as soon as possible. Attempts were also made to have some of the other projects carried out by various service groups. On 14 October 1947 Dr. Taylor submitted a suggested method of measuring the gamma intensity versus time. Unfortunately Dr. Taylor did not have available sufficient information as to the intensities to be measured so that the problem appeared more difficult than was warranted.

On 17 October 1947 Dr. Taylor's proposal was forwarded to Dr. Froman with a revised program for all nuclear radiation measurements. This outline included methods of carrying out the various projects in some detail. Because of the interest in the importance of the thermal radiation from a medical viewpoint a project on its measurement by means of heat sensitive papers, to be supplied by Dr. William Penny, British Ministry of Supply, was included.

On 21 October 1947 Dr. Froman commented on the nuclear radiation projects, approving some of these and disapproving others. Since it was felt that several of these projects were of vital importance to

the military services a memorandum to the Scientific Director was prepared on 6 November 1947 requesting re-consideration of some of the disapproved items. On the basis of new information on the intensities involved, Dr. Taylor had indicated that the measurement of the gamma radiation versus time might be feasible with a micro-second time resolution. Although Dr. Graves expressed interest in this measurement, it was decided that sufficient time was not available to have the work completed by 1 January, and therefore the project was abandoned. It was suggested that Dr. Taylor draw up a detailed program for developing equipment for this purpose in the event that such measurements might be desirable in the future. Dr. Graves did agree to Los Alamos supplying samples of neutron detectors for measurement of the neutron flux within dug-outs. On the basis of the program of 17 October and Dr. Froman 's comments, plans were drawn up for the final program of measurements to be carried out by the Radiological Safety Section.

Collective Protector and Cascade Impactor Projects.

After a number of informal talks among Colonel Charles Loucks, of the Research and Engineering Division, Chemical Corps, U.S. Army, Mr. Lanier and Mr. Benjamin of the Chemical Corps, and Dr. Scoville of the AFSWP a request was made on 7 November 1947 for measuring particle size of cloud material. This equipment was manufactured according to the model designed by Dr. Harold Hodge, University of Rochester, with adaptions to make it satisfactory for use under conditions of the forthcoming tests. In addition, as a result of conversation with the Corps of Engineers and Chemical Corps

representatives, it was considered advisable to include collective protectors in the larger Corps of Engineers' dug-outs. Mr. Bernard Siegel of the Chemical Corps, Edgewood Arsenal was given responsibility for this collective protector program, and it was considered desirable that he also take over the cascade impactor project at Eniwetok. In the meantime Mr. Lanier and others at Edgewood proceeded with the manufacture and calibration of the cascade impactors.

Aerial Crater Survey.

On 27 October 1947 the Bureau of Aeronautics requested approval of a project to measure the contamination of the crater by means of aerial survey. This was initially turned down as being impractical, but after discussions among Commander Bliss, BuAer, Colonel Cooney, Captain Russell, and Dr. Scoville it was agreed that such a survey could be made and would be desirable in the interests of radiological safety. This experiment was therefore incorporated in the projects assigned to the Radiological Safety Group. Arrangements were made to obtain a C-47 on ZERO day and a helicopter on later days for use on this project. This project was of special interest to Lt. Comdr. Elmer R. King, MC, USN, of the Bureau of Medicine and Surgery, who had been largely instrumental in the planning of this experiment and who would play the principle role in executing it.

Gamma Radiation Exposure.

One of the most important projects under the cognizance of Task Group 7.6 was the measurement of gamma radiation in the open and in shielded positions. The only feasible method of making these measurements on a large scale was by means of film badges. These had been

used with considerable success at Bikini by Dr. Dessauer, but it was realized that the badge in use at that time was not completely satisfactory since certain gaps in the range of dosage covered existed. Dr. Dessauer was consulted on the gamma radiation measurements early in November and it was agreed to request Eastman Kodak to furnish information on emulsion which might cover the desired range satisfactorily. The AEC, which was handling the procurement of this material, was requested to obtain this information from Kodak in order that procurement could be initiated as rapidly as possible. Finally in December the desired information was obtained on the emulsions which might be used, and an order for four thousand badges was initiated. At this time Dr. Taylor was requested by the AFSWP to carry out the development of the film badges used during the operation and a transfer of funds to the Bureau of Standards was arranged. On December 15 the AFSWP was informed by Major Dauer that Kodak was having difficulty in producing the films and a meeting was arranged in Rochester at which Dr. Taylor, Dr. Andrews, Mr. Dahl, Lt. Col. Houghton, and Dr. Scoville discussed the problem with representatives of the University of Rochester and Eastman Kodak. A complete description of the films desired was given Kodak at that time and delivery was promised shortly on the initial part of this order with complete delivery by 1 February 1948. Two weeks later Kodak reported that they were unable to supply the type of packaging desired and recommended a choice of two other coatings. A second choice was therefore given Kodak but two weeks later they

replied that films with this type of packaging could not be supplied until 1 April 1948. Finally the third coating, an aluminum foil, was ordered and delivery was obtained by air at Long Beach on 15 February 1948. The delivered badges were by no means satisfactory since they covered twice the required area but nevertheless they were usable.

Biological Measurements.

In November when the Bureau of Medicine and Surgery was informed of the forthcoming tests, Captain Rupert H. Draeger, MC, USN, at the Naval Medical Research Institute prepared a preliminary program to carry out certain experiments which were considered desirable from a medical point of view. Previous experiments with the animals exposed at Bikini and in the Laboratory had indicated the desirability of obtaining information on the physiological changes occuring in animals exposed to extremely high radiation. Because of the impossibility of obtaining high enough intensities in the laboratory, experiments of this nature could only be carried out with the gamma radiation emitted at the time of detonation of an atomic bomb. Captain Draeger first suggested exposing small numbers of animals during the forthcoming tests, but this was considered impractical by the AEC, the Joint Task Proof Committee, and Dr. Froman and was turned down. A number of meetings were held regarding such tests with Dr. Shields Warren, Dr. Froman, Admiral Parsons, Colonel Cooney, Captain Draeger and others. Finally it was decided to limit the experiments in the SANDSTONE operation to the testing of animal containers which might be used in any future tests.

[redacted]

The Bureau of Ships was consulted on possible design of containers which might be used for this purpose and on about 1 January 1948 drawings were prepared. Originally it had been planned to place the containers on land and withdraw them by means of cable after the shots. Later it was decided to include two chambers placed on rafts off shore from the ZERO Island. It was considered that the rafts might be more satisfactory because of the cooling action of the water and the greater facility offered for removing the animals rapidly after the shot. Arrangements were made for the construction of four test animal chambers, two for land and two on rafts, by the radiation laboratory at Hunter's Point. These were manufactured and shipped to Long Beach for transportation to Eniwetok on the CVE by 15 February 1948

In addition to the test animal containers Captain Draeger proposed to continue the studies on exposure of biological materials which had proved so interesting following Bikini. A wide variety of samples of assorted biologicals were obtained from the California Institute of Technology, Department of Agriculture, Naval Medical Research Institute, and Chemical Corps, U.S. Army. These were carefully packaged and shipped by air courier to go abroad the CVE by 15 February 1948.

A third project was initiated by Captain Draeger to measure the thermal sensitivity of various textiles, paints and metals. About 15 January 1948 Captain Draeger obtained the services of Commander Rudolph M. Langer of BuShips to assist on the organization and

planning of this project. Commander Langer arranged to procure the necessary materials and to have them adequately calibrated at the Naval Shipyard Materiel Laboratory, Brooklyn, New York. This laboratory was already carrying out an extensive program to study the heat sensitivity of certain coatings for use on Naval Materiel. Arrangements were made through Commander Edmund J. Hoffman, USN, of the BuShips to use the same racks for exposing the plates that were to be used for the samples being exposed by the Bureau of Ships.

Gamma Radiation Shielding.

On 10 October 1947 the BuShips was advised that tests would be conducted by the Atomic Energy Commission which would measure all the physical phenomena associated with the detonation of an atomic weapon. It was further learned that the armed services would lend logistical support and would be permitted to make additional observations provided they could be accomplished without interference with the AEC basic tests and without materially increasing the logistical support required. At this time it was understood that a rather complete gamma-ray shielding program proposed by the AFSWP was included in the scientific program.

Accordingly, on 13 October BuShips submitted a letter to the Joint Proof Test Committee outlining its proposals for tests to be conducted. In this letter it was requested that the Bureau of Ships be furnished a report on the transmission of gamma rays through various shielding media. At a conference attended by Dr. Froman, Captain Russell of the AEC, and Captain Maxwell, USN, Commander

Hoffman, and Mr. J. J. Kearns of the Bureau of Ships it was learned that the shielding experiment proposed by the AFSWP had been rejected as there was some discussion as to its potential value and the magnitude of the undertaking.

Discussions were then held with representatives of the Bureau of Yards and Docks, Chief of Engineers, U. S. Army, and Dr. Scoville of the AFSWP. All were very much interested in the project and thought it of considerable potential value. It was also believed that such a project would neither interfere with the main objectives of the operation nor unduly increase the logistical requirements for its conduct. On 20 October the Bureau received official correspondence from the Chief of Naval Operations directing that proposals for projects be submitted as soon as practicable. On 4 November a complete proposal was submitted to the office of Lt. General Hull embodying essential features of the gamma-ray shielding test and it was suggested that it be coordinated with the radiological safety section work. Colonel Cooney concurred in the proposal. It was also proposed that Commander Hoffman and Lt. E. C. Vicars, USN, be ordered to the Task Force to assist in the field work involved. These proposals were approved in a conference held on 6 November with Commander Hooper, USN, Dr. Froman and Commander Hoffman attending. This was later confirmed by a memorandum from the Office of Lt. General Hull in the latter part of November. Logistical requirements were then submitted and procurement of necessary materials was initiated on 8 December 1947. Originally plans were made to utilize structures placed on the test site by the

Chief of Engineers, U.S. Army, the Bureau of Yards and Docks, and the AEC as specimens of shielding. These were eventually considered too complicated however and it was proposed that a number of plain steel shields made of 1 inch steel plates, 1 and 2 feet square, capable of being built up by bolting together into any desired thickness to be used. It was also requested that concrete slabs, 3 inches in thickness be manufactured at the test site. In addition a quantity of angle iron was procured to be used in mounting these sample shields. Assembly of the material was made at San Francisco, Naval Shipyard under the direction of LT Vicars. This material was then delivered to Terminal Island for transport to the test site.

The film method of measuring the amount of gamma radiation was selected as being the most practicable for the purpose of the test. It was decided that the film badges for all gamma measurements be procured by the AFSWP. Dr. Lauriston S. Taylor of the U.S. Bureau of Standards was placed under contract by the AFSWP to calibrate and read film badges for all gamma radiation readings.

Decontamination and Heat Sensitivity Studies.

The problems associated with handling and disposing of radioactive materials resulting from atomic bomb bursts had been one of great concern to the Navy for the previous 15 months as a result of Operation CROSSROADS. The Bureau of Ships had been assigned the responsibility for development of ship decontamination measures shortly after operation CROSSROADS.

A new project was officially submitted by the Bureau of Ships to the Joint Proof Test Committee on 13 October 1947. At a conference held shortly thereafter between Bureau representatives and representatives of the AEC the project was recommended for approval. This project was designed to provide additional information as to the contaminability and relative ease of decontamination of a wide variety of materials which could conceivably be used as protective coatings on Naval equipment and structures.

At this conference it was pointed out that an effort would be made to prevent any excessive contamination such as resulted from Operation CROSSROADS. The Bureau emphasized that the project required no additional personnel, and a minimum of logistical support. Although no considerable contamination was expected, this could not be predicted with certainty and it seemed an opportunity to gain some valuable information.

This test would also provide information concerning the behavior of the various particular coatings when subjected to the radiation spectrum produced by the weapon. Such a test could not be duplicated with any degree of certainty under laboratory conditions.

Approval of the project was confirmed by memorandum to the Bureau of Ships from the Office of Lt. General Hull in early December. Procurement of samples of materials was then initiated. Previously a carefully controlled contamination and decontamination project at the Naval Radiation Laboratory had been authorized to survey a list of some sixty basic materials initially, which provided a tailor-made list for selection of sample materials for the test.

The materials comprising the test panels consisted principally of about 30 synthetic plastics, 15 types of metal finishes, and 7 rubber samples. The plastics were prepared by the New York Naval Materiel Laboratory, the metal samples by the Naval Experimental Station, Annapolis, Md., and the rubber samples by the Rubber Laboratory at Mare Island Naval Shipyard. Suitable racks for mounting these materials in the field were ordered manufactured by the San Francisco Naval Shipyard under the direction of Lt. Vicars. In addition a complete list of tools required to erect the racks in the field was compiled. All material was crated and sent to Terminal Island where it was placed aboard the U.S.S. BAIROKO for transport to the test site.

Test of Crystal Dosimeters.

One of the most urgent defensive problems presented by the possibility of atomic warfare is that of being able to determine quickly and with a fair degree of accuracy the amount of radiation exposure of casualties. At a time when medical talent, facilities and materials may be extremely limited in availability it will be highly desirable to provide treatment on a priority basis to those individuals who have a reasonable chance to recover. It is logical to assume that at some future date a beneficial treatment will be developed. The first step in any rescue work would then be the segregation of personnel with potentialities for recovery from those who have obviously received a lethal dose. This indicates the necessity of every individual who may be subjected to such an attack

being provided with a total radiation dosage indicating device which would cover a range of from about 200 to 1000 roentgens. Additional desirable features of such devices would be that they should be light, cheap, require no up-keep and be capable of being read easily by relatively inexperienced personnel and with a minimum of auxiliary equipment.

In the latter part of 1947 Dr. Herbert J. Friedman of the Naval Research Laboratory published a report on the coloration by X-rays of crystals of several compositions. This method seemed to offer possibilities of fulfilling the need outlined above. Although this work was in the most preliminary phases of development it seemed advisable to request that a project be proposed to test this method of measuring radiation dosage. Therefore, the project was submitted and approved along with other Bureau of Ships projects.

When approval was received steps were taken to obtain suitable crystals for the purpose. Dr. Friedman was contacted and though security considerations did not permit disclosure of the immediate purpose for which the crystals were desired, a tentative promise of about one hundred crystals was received.

The crystals which had been tested previous to this project were comparatively bright in color. It was believed that if sufficiently large crystals were grown, adequate coloration could be produced for visual checking of doses. These materials are subject to fading when exposed to ultra-violet light, therefore it was necessary to package the crystals in a small aluminum tube. Because of the limited time available no calibration was feasible prior to departure from Washington.

The following materials are included for test in this project; sodium chloride, lithium fluoride, potassium chloride, and potassium bromide. The crystals are approximately 1/2 inch square and 3 inches long. In their natural state they are clear and colorless but upon exposure to radiation they absorb various bands of the spectra, giving the appearance of color. Delivery of these materials was made to the U.S.S. BAIROKO for transport to the test site. On the voyage to the test site it was planned to attempt calibration by exposure to the radium source available.

Operations Plans for Technical Measurements.

When the first draft of the Scientific Director's Operation Plan was received, Task Group 7.6 prepared a plan for carrying out the technical measurements assigned to it. A draft of this plan was submitted to the Scientific Director on 20 November and used as a basis for future planning. Much of the information in this plan was incorporated by the Scientific Director in the over-all operations plan for the Task Force. Frequent coordination was required with the other scientific groups, with J-3, and with those responsible for organizing the air operations. In January a procedure for a flight plan for use in the C-47 aerial survey operation was prepared in coordination with Colonel Shephard, Task Group 7.4. At the end of January a final draft of the operations required for the technical measurements unit was prepared and concurred in for the most part by the Test and Scientific Directors.

HEADQUARTERS
TASK GROUP 7.6

10 May 1948

OPERATIONAL REPORT

PHASE C

CHAPTER 5

EMBARKATION AND VOYAGE TO TEST SITE

Movement to Port of Embarkation.

One 14 February 1948 all offices of the Radiological Safety Group in Washington, D.C., with the exception of that of Rear Echelon under the command of Commander Fonick were closed.

Colonel Cooney departed for Pearl Harbor to join the Forward Echelon, Headquarters, JTF-7 (Main) Staff at Fort Shafter, T.H. Commander Winant, Colonel Isbell, Commander Andrews, Lt. Colonel Houghton, Commander Fonick, Major Stone, and Dr. Scoville proceeded to Los Alamos, New Mexico to attend an AFSWP conference scheduled for 17 February. From there this group with the exception of Commander Fonick continued on to Terminal Island, Long Beach, California, the embarkation site for Task Group 7.6. At this time Commander Fonick returned to Washington, D.C. to carry out his duties as Commander, Rear Echelon. Meanwhile the balance of the staff personnel had departed from Washington, D. C. to proceed directly to the embarkation point.

During the period from 15 February to 28 February 1948, staff and non-staff personnel of Task Group 7.6 reported to Terminal Island

from various stations throughout the country. The majority of these personnel reported by 18 February, and since quartering facilities at the Terminal Island Receiving Station were extremely overcrowded, it was decided to move personnel aboard the U.S.S. BAIROKO (CVE-115) which was then at that port. This was done on 20 February at 1300 hours. A few officers and men were left ashore to expedite the supply and logistical work yet to be accomplished prior to the scheduled sailing date of 29 February.

On 21 February the BAIROKO departed Terminal Island with the bulk of Task Group 7.6 personnel aboard, arriving at San Diego the following day. From the 22nd to the 26th of February, fuel, aviation gasoline and aircraft were loaded aboard, and the ship departed on the morning of 26 February, arriving back at Terminal Island late that afternoon. The remainder of equipment and supplies were now loaded aboard and the rest of the Task Group personnel embarked.

Activities Enroute to Test Site.

On 29 February 1948 the BAIROKO departed from Long Beach with the Task Force convoy bound for Pearl Harbor, thence to Eniwetok.

From the initial date of embarkation indoctrination of personnel on the mission of the Task Group was directed. Commander Winant gave two orientation lectures in which all aspects of the mission were covered and it was pointed out that due to the variety of services and civilian personnel represented a coordination of effort must be emphasized. Immediately upon sailing for Pearl Harbor detailed operational planning and a comprehensive study of expected problems commenced.

Special Orders Number 1, Task Group 7.6, dated 28 February 1948, were published, establishing an Air Monitor Unit (Task Unit 7.6.1) under the command of Colonel Isbell which would be located at Kwajalein. The unit would operate from this base on air monitoring missions in conjunction with the atomic bomb tests. Special Orders Number 2, Task Group 7.6, dated 29 February 1948 established additional task units into which the task group was divided for operational purposes. Task Group 7.6 was now departmentalized into Task Units as follows:

T.U. No.	DESIGNATION	COMMANDED OR DIRECTED BY
7.6.1	Air Monitor Unit	Col. R. N. ISBELL, USAF
7.6.2	Staff Unit	Lt. Col. K. H. HOUGHTON, USA
7.6.3	Operations Unit	Maj. W. W. STONE, Jr., USA
7.6.4	Laboratory Unit	Cdr. H. L. ANDREWS, USPHS
7.6.5	Radiological Records Unit	Maj. J. T. BRENNAN, USA
7.6.6	Technical Measurements Unit	Dr. H. SCOVILLE, Jr., AFSWP
7.6.7	Monitor Unit	Cdr. B. H. SMITH, Jr., USN
7.6.8	Advisory Unit	Dr. J. F. NOLAN, AEC
7.6.9	Rear Echelon Unit	Cdr. T. R. FONICK, USN

At this time Captain William F. Bolen, USA was designated as Historical Officer, Task Group 7.6 assisted by Chief Yeoman Cameron W. Crossdell.

While enroute to Pearl Harbor, Lt. Commander Jacob J. Vandergriff Jr., USN, the School Director at the Radiological Safety School, Treasure Island, California, was designated as the School Officer for Task Group 7.6, and he outlined a schedule of classes to be conducted while enroute to the test site. These classes began on 1 March and were conducted daily in the Forward Ready Room of the ship. The school day was divided into four periods. An outline of the subject matter covered during the first week at sea, showing respective lectures is as follows:

SUBJECT	LECTURER
1. General Nature of Operations 2. Phenomenology	Dr. Scoville
3. Task Force Organization 4. Radiological Safety Plan 5. Task Group Operation Plan	Cdr. Winant
6. Instrumentation 7. Types of Instruments 8. Calibration of Instruments	Cdr. Andrews
9. Cloud Travel 10. Evacuation and Reentry 11. Operations	Maj. Stone
12. Air Operations	Col. Isbell
13. Instructions to Monitors	Cdr. Smith
14. Security	Capt. W. E. Hanley, J-2 Section, JTF-7

The outline of subject matter covered during the second week at sea, showing respective lecturers is as follows:

SUBJECT	LECTURER
1. Instructions to Monitors	Cdr. Winant
2. Scientific Operations I	Maj. Stone
3. Scientific Operations II	Maj. Sheppard
4. Electronics I (Electricity)	Cdr. Andrews
5. Electronics II (Vacuum tubes)	Mr. Menzer
6. Electronics III (Details of GM Survey instrument)	Cdr. Andrews
7. Communications	Capt. Helgestad
8. Medical Aspects I	Dr. Morton
9. Medical Aspects II	Maj. McDonnel

10.	Measuring Beta Activities	Cdr. Andrews
11.	Gamma Radiation	Dr. Scoville
12.	Protective Devices	Mr. Seigel
13.	Gas Masks and Hoods	Maj. Cook and Mr. Seigel
14.	Safety Precautions	Lt. Col. Houghton

In addition to the scheduled lectures a daily afternoon period was established for the calibration of the various instruments to be utilized in monitoring operations by use of radium sources of known values.

Physical conditioning was deemed advisable, particularly in the case of monitors who would be involved in somewhat strenuous activities in the forthcoming operations. A period of physical conditioning was scheduled each afternoon.

On 7 March 1948 the Task Group arrived with the rest of the Task Force convoy at Pearl Harbor and departed the following day for Eniwetok Atoll.

During this period a photographic unit took both still and motion pictures of the various activities of the Task Group aboard ship. Maj. G. M. McDonnel, MC, USA, a member of Task Group 7.6 was designated as Liaison Officer with the photographic unit to assist in coordinating their work with the scheduled operations of the Task Group.

A complex communication system involving the use of many types of both Army and Navy equipment was employed in the radiological safety net. Captain James E. Helgestad, USA coordinated this work for Task

Group 7.6 using existing installations supplemented by various types of portable radio equipment. He also devised the coding and cipher systems to be used by Task Group 7.6 in Operation SANDSTONE. Lt. (jg) David L. Flynn, USN actively assisted this work and also organized the Radar Tracking system for the Lagoon Boat Patrol which would supply radiological data for the reentry of ships into the lagoon after the shots.

A considerable portion of the time and effort of the Task Group staff during the cruise from Terminal Island to Eniwetok was devoted to the development of an Operation Plan. ANNEX E, the Operations Annex, was largely devoted to an initial analysis of the radiological safety requirements established by the Scientific Operating Plan (SOOP) of Task Group 7.1 At a later date, it was found advisable to replace this annex with a more flexible "Operations Schedule." ANNEX G, the Technical Measurements Annex, contained a description of 14 of the Service Tests being conducted at SANDSTONE. It will be noted that these tests are protective in nature. Many of the tests will produce long term results in the development of shielding, biological studies, etc., and can appropriately be classed as Radiological Defense Projects. Other projects, such as analysis of water, dirt and dust samples and crater surveys were primarily pointed toward the short term objective of promoting Radiological Safety within the Task Force. In general it will be difficult to dissociate RadSafe and RadDef projects. Nevertheless, the significance of the RadSafe projects to the successful accomplishment of the mission should be clearly recognized.

Considerable lattitude should be allowed the Radiological Safety Group in planning and conducting RadSafe projects in all similar operations.

By the time the Task Force convoy had arrived at Eniwetok, 16 March 1948, the final draft of Task Group 7.6 Operational Plan was completed and ready for distribution (Copy attached as appendix "B"). In order to amplify the purport of policy as set forth in the operational plan itself, a series of letters on radiological safety was started at this time. As of 16 March, three of these RadSafe letters had been distributed to Task Group Commanders, covering subjects listed below (Copies attached as appendices "C", "D", and "E", respectively):

RADSAFE NUMBER	SUBJECT
ONE	Radiological Safety - General
TWO	Radiological Safety - Gas Masks
THREE	Radiological Safety - Procedures for Handling Contaminated Material.

Numerous discussions had been held during this phase among representatives from Oak Ridge, Los Alamos, Hanford and other laboratories concerning the establishment of standards and procedures for the control of contaminated materials and personnel. As a result of these discussions an agreement on a workable plan was reached and RADSAFE THREE was published to disseminate this information to the Task Force.

Logistics.

Prior to this phase of operations virtually all materiel was either on hand at Terminal Island or indications of delivery were known. The

[redacted]

only major exceptions to this were orders for gas masks, microscope, dark field condenser, and a stage micrometer. The Washington Office had been notified of the status of these orders and final delivery was made prior to the ship's departure.

Early in February a shipment of four thousand goggles was received by Task Group 7.6 supply representative and his staff at Terminal Island from an AEC warehouse in Oakland. These goggles were to be used by members of the Task Force as a safeguard against light intensities of atomic explosions during forthcoming operations. For the most part they were second-hand goggles, having been stored since the time of Bikini tests, and were in poor condition. Various tapes which had been used to cover the ventilation holes had deteriorated, and entire lots of goggles were found adhered together. Four days work on the part of Task Group 7.6 crew at Terminal Island was required to put the goggles in usable condition.

On 19 February the loading of material aboard the BAIROKO began but had to be suspended during the week 21 February to 27 February when the CVE made a trip to San Diego. Loading was resumed upon return of the BAIROKO to Long Beach and completed on 26 February.

During the voyage to Eniwetok clothing supplies were stored in a number of compartments throughout the ship. The initial issue of monitor's clothing was made from the after aviation storeroom on 12 March. This issue consisted of 1 pair army field shoes, 6 pair khaki sox, 1 suit of navy green trousers and shirt, 1 field cap, 3 pair bootees (canvas shoe covers), 1 pair work gloves, 1 field bag, 1 note-

book, 1 canteen, 1 helmet liner or 1 sun helmet, 1 pair dark goggles, 1 pair sun glasses, 1 wrist watch, and 1 assault gas mask.

CHAPTER 6

PROJECT DEVELOPMENTS

Laboratory.

During the voyage to the test site the various types of instruments were unpacked and inspected. Circuit checks were performed and replacement of parts and batteries made when need of such adjustments was indicated. Work on setting up the laboratory continued so that equipment could operate at greatest efficiency when operations actually started.

Daily calibration checks were run on as many instruments as possible until a series of at least five checks had been accomplished on all instruments.

On 2 March 1948, Commander Andrews requested through Commander Fonick of Rear Echelon that Dr. L. F. Curtis of the Bureau of Standards make immediate shipment of Cobalt 60 solution in flame-sealed containers to be used as standards for measuring radiation. These were needed for replacement of similar standards which had been broken in transit.

It was found that when reading pocket dosimeters they should never be pointed directly at the sun since the optical system acts as a magnifying glass and the graduated scale, being made of a photographic emulsion, is easily ignited and rendered useless.

Radiological Records.

On 3 March, Lt. Colonel Houghton turned over the responsibility for the medical records to Major J. T. Brennan, together with the following: 400 physical examination and laboratory test reports, blank forms

for monitors data sheets, individual exposure cards, and physical examination certificates. Major Brennan set up a Kardex file system containing an individual card for each member of the Task Force.

During the early part of March certain personnel of Task Group 7.6 received exposures incident to instrument calibration work. These exposures were detected on film badges and dosimeters, and were recorded in the Kardex file. This latter procedure served as a dry run test of the record system.

By 15 March 300 more physical examination reports had been received. A survey of physical examination reports was begun in order to determine the status of Task Group 7.6 personnel with regard to compliance with Field Order Number 1, Annex J, paragraphs 4-a and 4-e. These sections dealt with personnel who would be working with radioactive materials or in radioactive areas and are herewith quoted:

> "All such persons shall, prior to departure from the United States, receive a complete physical examination including chest X-ray, blood count, and urinalysis; and reports of such examination shall be in the hands of the Radiological Safety Officer prior to departure. Prior to final release from the Task Force, personnel shall undergo such further physical examination as the Radiological Safety Officer may specify. Names of all individuals who are expected to enter radioactive areas will be submitted to the Commander of Task Group 7.6 in the form of an eligibility list two weeks prior to the test. Commander Task Group 7.6 will prepare appropriate cards on all such personnel. In addition, a Control list containing the names of any persons who expect to enter a contaminated area on a specific day will be submitted to Commander Task Group 7.6 on the preceding day. Commander, Task Group 7.6 will report to the Task Force Commander with copies to Test Director and Scientific Director the names of any persons who are disqualified for such entry by reason of previous radiological exposure."

Photographic Dosimetry.

On 3 March Major Brennan took over responsibility for film badge records and administration of the photometry section. The technical aspects of photometry however were to remain under the direct supervision of Commander Andrews.

On 3 March the first calibration of personnel film badges was run, using the 48.7 mg radium source and a second calibration was completed on 6 March. The films were developed and read on a Western Densitometer, model number 877.

During the period 10 to 15 March, film badges were issued to monitors who were being exposed in connection with instrument calibration work on the Flight Deck. All these films were developed, read and the records forwarded to the Medical Records Unit for permanent filing.

Technical Measurements.

All the technical measurements being carried out within Task Group 7.6 were placed under Task Unit 7.6.6 of which Dr. Scoville was in charge. These measurements included the large fraction of the measurements which were being carried out at the request of the armed forces. The various projects which were included under this unit are listed below, with the personnel responsible for each one:

PROJECT	PERSONNEL
Gamma Radiation vs Distance	Dr. H. Scoville, Jr., AFSWP Cdr. E. J. Hoffman, USN Dr. Lauriston Taylor

Gamma Radiation Shielding	Cdr. E. J. Hoffman, USN Lt. E. C. Vicars, USN
Residual Contamination in Crater	Cdr. H. L. Andrews, USPHS Mr. R. E. Murphy, USPHS
Air Survey of Ground Contamination	Lt. Cdr. E. R. King, USN
Exposure of Panels for Decontamination and Heat Sensitivity Studies	Cdr. E. J. Hoffman, USN Lt. E. C. Vicars, USN
Neutron Absorption	Dr. H. Scoville, Jr., AFSWP
Radioactivity in Cloud	Dr. H. Scoville, Jr., AFSWP Lt. Cdr. E. R. King, USN Lt. Col. J. J. Cody, Jr., USAF
Test of Efficiency of Field Collective Protector	Mr. B. Seigel, CmlC Cdr. H. L. Andrews, USPHS Mr. R. E. Murphy, USPHS
Particle Size of Material in Cloud	Mr. B. Seigel, CmlC Cdr. H. L. Andrews, USPHS Mr. R. E. Murphy, USPHS
Thermal Radiation Papers	Dr. H. Scoville, Jr., AFSWP Cdr. R. M. Langer, USNR
Test of Direct Reading of Crystal Dosimeters	Capt. R. H. Draeger, USN (BuMed Dosimeters) Cdr. E. J. Hoffman, USN (BuShips Dosimeters)
Exposure of Biological Assay Material	Capt. R. H. Draeger, USN
Thermal Radiation Plaques	Cdr. R. M. Langer, USNR Capt. R. H. Draeger, USN
Test of Animal Containers for Suitability in Exposing Animals at Close Range	Capt. R. H. Draeger, USN

In the course of the trip to Eniwetok detailed plans were drawn up for carrying out the various projects. This involved schedules for setting up equipment on the test islands and for recovering materials subsequent to the tests. Materials for the various projects were assembled and carefully marked during the trip out so that no time would be lost on arrival. A few items which had not been received prior to departure were ordered at Pearl Harbor.

Work was started on the preparation of pre-test reports for each project. These were planned so that they could be incorporated in the final reports of the project with only minor variations. They were to include details of method of making the measurements, summary of the past work in the field and the nature of the results which it was hoped would be obtained from the projects.

The precise information to be obtained from each project and the methods in which they were to be accomplished is given in Annex "G" of Operational Plan 1-48, Task Group 7.6 (See Appendix "B").

Monitors.

Monitors daily attended classes and calibrated instruments during the voyage to the test site. The program was designed to enable the monitor to adapt the theoretical training received at the radiological safety schools to practical situations.

The action of a monitor in the event a group leader working in a contaminated area refused to remove his party upon being warned to do so by the monitor was discussed at a meeting held on 4 March 1948. Commander Winant ruled that the monitor, after properly notifying the

party leader as to the radiological exposure condition, would leave the area after having received an exposure of 3 roentgens and report the incident immediately.

HEADQUARTERS
TASK GROUP 7.6
JOINT TASK FORCE SEVEN

OPERATIONAL REPORT
PHASE "D"

CHAPTER 7

Preparations at the Test Site.

Upon arrival at Eniwetok on 16 March discussions of the operational plan were held aboard the MT MCKINLEY following which preparations for forthcoming missions immediately got underway.

On 17 March Task Unit 7.6.1 (Air Monitoring Unit) departed for Kwajalein to commence operations in conjunction with Air Task Group 7.4.

Captain Draeger and Dr. Scoville, accompanied by Lt. E. C. Vicars, USN who had arrived at Eniwetok on 5 March as advance echelon representative, visited Engebi at this time in connection with preparations for technical measurements projects. Arrangements were made with the island commander for use of certain facilities on Engebi and on 18 March seven members of the Technical Measurements Unit (TU-7.6.6) went by LCT with all their equipment to that island, setting up a base of operations for their unit ashore. A TCS radio was also sent with this party to facilitate frequent communications with the main Task Group on the BAIROKO. The organization of this shore unit proved very successful and reduced materially the time required for the pre-test preparations. Excellent facilities were available for assembling equipment and doing the necessary installations and the cooperation received from the Engineer detachment on the island was extremely helpful. The only

serious difficulty encountered by this group was that of transportation. Although vehicles had been requested for the use of TG-7.6 prior to departure from Washington, none were available upon arrival at the island. Borrowing of vehicles from other groups ashore and the use of DUKWs for handling heavy equipment was necessary for several weeks, until a jeep was eventually procured through TG-7.1. In future operations of this nature, ample transportation facilities should be made available to the radiological safety group.

On 20 March the Task Force shifted anchorage from Eniwetok Island to Engebi Island, and TG-7.6 began a daily schedule of work in coordination with full scale Task Force preparations for the X-RAY shot.

Nightly meetings of the staff of TG-7.6 aboard the CVE, which had been regularly conducted since the date of embarkation at Long Beach, were continued. At these meetings various staff members made informal reports regarding the status of current work in their respective organizations. Current problems were discussed and plans outlined for the following day.

In accordance with JTF-7 Field Order Number 2, the TG-7.6 Withdrawal and Roll-Up Plan was submitted to Colonel Cooney for endorsement and forwarding to CJTF-7. In addition to administrative, logistics, and similar routine plans for the roll-up operation, the following recommendations were made:

(a) After dissolution of JTF-7, the responsibility for coordinating the technical measurements projects with the Armed Services and the AEC be assigned to the Armed Forces Special Weapons Project in accordance with AFSWP charter.

[redacted]

(b) The forwarding endorsement recommended that a small radiological safety group be included in the Post-SANDSTONE Garrison, provided by the service furnishing the Garrison. It also recommended that the stock of AEC RadSafe instruments in custody of TG-7.6 be released to the Post-SANDSTONE Garrison. Minor instrument repair and photometric dosimetry should be accomplished at Kwajalein. Major instrument repair should be accomplished in the ZI.

(c) Radiological Medical Records with supporting data for Medical-legal purposes will be delivered to the Test Director for incorporation in AEC records on Z-plus-25. Copies of these records in the cases of all military personnel will be forwarded to AFSWP for the proper distribution among the Armed Services.

On 29 April 1948 a letter was forwarded by Commander, TG-7.6 to Commander, JTF-7, recommending that the following radiological safety instruments be released to the Post-SANDSTONE Garrison at Eniwetok:

5 GM Counters, Victoreen 263A
2 Ion Chambers, National Technical Laboratories MX-6
20 Pocket Dosimeters, Kelly Koett, 0.2r
2 Charging Boxes for Kelly Koett Dosimeters
15 Replacement GM tubes
10 Sets of Replacement Batteries for everything
1 Test Meter
2 Radium Buttons

Two-hundred personnel film badges, to be forwarded to the Radiological Laboratory at Hunter's Point, Naval Shipyard for processing after use.

A letter dated 4 May 1948 from CJTF-7 to CTG-7.6 and CTG-7.2 approved the latter recommendation above and directed that as soon as possible CTG-7.6 deliver the items mentioned to CTG-7.2 for the Supply Officer, Permanent Garrison Force, Eniwetok. It further stated that it was desired that the items of equipment as listed be included in the Table of Equipment for the Permanent Garrison and that quantities of expendable supplies as listed will be considered as authorized stock levels.

In addition to other scheduled work being carried out during this initial preparation period at the test site a special study of currents off Eneebi was made. This study was conducted in order to anticipate as nearly as possible the direction and spread of any possible contamination resulting from fall-out or direct deposition by the explosion. The drift of partially submerged floating objects was also observed. Data for such a study was obtained through observations by helicopter and small boat patrols. The results of this study indicated that the currents were generally from the ENE direction and that no contamination would be expected south of a line bearing 240° T from the southern tip of Eneebi. The maximum current speed was established at approximately 0.5 of a knot. The results of the subsequent lagoon survey following the X-RAY shot indicated the value of this study and bore out the accuracy of its predictions.

During a period prior to PETER-X-RAY day a pre-rehearsal survey of all scheduled missions was made. Monitors concerned made personal contact with leaders of the various scientific parties on the actual site of proposed operations, and familiarized themselves with the situation as presented in the field. They made inspections of all stations or installations involved in their respective missions, and conducted on-the-spot briefing of associated personnel concerned. A daily check of all Radiafo radio circuits was also made. Detailed operations schedules were compiled and monitors briefed on missions in the same manner anticipated for actual test operations.

[redacted]

57

Particular attention was given to the ZERO island RadSafe survey scheduled to start on X-plus-1 day. Since this operation involved the necessity of using a rather complicated layout of numbered stakes to be used as reference points for plotting isointensity lines, it was desirable to hold several rehearsals involving the entire survey party to insure the greatest accuracy and speed possible in accomplishing the operation. The need to expedite this mission was given special emphasis since it was considered "routine" and as such the allowable daily exposure was 100 mr.

Throughout this period of practical indoctrination monitors were briefed in detail concerning the entire Rad Safe operation, and all participating personnel had gained a comprehensive picture of respective assignments as they appeared under field conditions.

The Task Group was now in readiness for the full-scale rehearsal of the Task Force X-RAY operations. This was reflected during PETER-X-RAY operations when all TG-7.6 missions were rehearsed with a minimum of difficulty.

On 9 April a critique was held aboard the BAIROKO at which monitors reported and commented on PETER-X-RAY missions. A summary of the more important comments follows:

(a) Radex should be broadcast to all ships.

(b) The L-5 flight to clear Aoman and Runit should be repeated X-RAY day afternoon because of possible delayed fallout.

(c) A RadSafe survey should be run via helicopter prior to drone tank operation.

(d) Tank control helicopter over personnel parties on ZERO island seems hazardous from standpoint of dust and mechanical failure.

(e) Party leaders should not pre-empt the duties of monitors.

(f) There should be a 6x6 truck available near revetment for emergency use of disaster party on X-minus-1 morning.

(g) Gas masks were badly mishandled in the rehearsal. They should be kept in carriers when not actually in use.

(h) Monitor in AVR-38 is on duty as a monitor and should not have full-time duty as a radio operator.

(i) It seems desirable to shield the land cable winch drum to decrease radiological exposure of the operating personnel.

(j) Inadequate quartering and feeding facilities encountered on Parry Island.

(k) Adequate working personnel should be assigned to parties where necessary to expedite missions.

(l) Lack of physical examination reports, eligibility lists and control lists.

These items were taken up by CTG-7.6 with appropriate Task Group Commanders following the next Task Force Conference.

On 7 April RADSAFE FIVE was published to all Task Groups, requesting that previously issued goggles for protection against blast intensities be made light-tight before use by covering ventilation holes in rubber housing. (See Appendix "G")

A supply section and issue point combined with a decontamination center was established on the port side of the BAIRCKO hangar deck. It was planned that as monitors prepared to leave the ship they would report to this point and draw instruments, booties, gloves, and any

other necessary equipment required for the mission. Upon completion of their mission they would come aboard at the port side and pass into a restricted zone roped off on the deck where they would be monitored for contamination, draw new clothing if needed and turn in their equipment, film badges, dosimeters and monitor report cards. This system would be an established routine and prevent personnel in contaminated clothing from going about the ship spreading radioactive contamination.

It was evident that the number of operations which required the use of monitors and the necessity of a continual check on the location of each member of TG-7.6 would require preparation of a detailed operation schedule for each day throughout test periods. In preparing this schedule it was endeavored to involve all essential movement of personnel in a coordinated manner. Each RadSafe party was given a number, its time of movement noted, names of monitors given, the type of transportation to be used, and a brief summary of the specific mission. A code designation was assigned each mission to facilitate communication by radio with RadOps on the BAIROKO. The priority of missions was also designated as ROUTINE or URGENT. A rough draft of this schedule was given a thorough study, and shortly before X-RAY day it was mimeographed in final form and distributed to all personnel concerned. However, by X-plus-1 day it was found necessary to schedule a number of additional missions which had not been anticipated. Finally, the program became so accelerated as a result of encountering lower radiation intensities than had been expected, that the original operations schedule became no longer applicable. Therefore it became necessary in the midst of X-RAY operations to prepare a new

schedule of missions on a day to day basis. Commencing with X-plus-2, a schedule was published each night for the following day. This new abbreviated schedule gave the RadSafe party number, a brief description of the mission, names of the monitors, type and number of instruments involved, number of film badges to be provided, the time of issue and time of departure. The two latter items expedited the work of the supply section, enabling them to prepare the proper number of various types of equipment in advance for issue when scheduled. Monitor assignments were regulated in accordance with previous exposure as recorded by the Medical Records Unit.

CHAPTER 8

TESTS

X-RAY - YOKE - ZEBRA

X-RAY Test.

During the week prior to X-RAY day final details o. :est installations were accomplished. The technical measurements unit distributed film badges and heat sensitive papers for recording various intensities on ZERO island at a number of structures, stakes, etc. Many different materials for exposure such as papers, woods, etc. as well as biologicals were also set out at this time.

At Eniwetok a base of operations had been established at the air strip to carry out RadSafe missions in that area. These missions involved monitoring returning drone planes, removing and disposing filter units, and obtaining accelerometer data from these aircraft, as well as monitoring crews before their return to Kwajalein. In addition to these missions at the air strip this party was to monitor the swimming beach and effect general radiological safety for the island.

Monitors were established on Ujelang and Parry Islands to effect radiological safety as well as coordinate film badges distribution and collection among personnel required to remain there through the operation.

Other monitors were sent aboard the various ships in the Task Force. They were to keep an accurate check on any radioactive samples brought aboard as well as effect radiological safety among personnel.

Task Unit 7.6.1, already established at Kwajalein, was ready to carry out air monitoring missions in conjunction with the Air Task Group operations. Also operating out of Kwajalein would be the C-47 aerial survey to determine radiation intensities and fallout at varying altitudes in the vicinity of ZERO island on the shot day.

On X-minus-3 the first of a group of monitors who would accompany various scientific parties on X-day departed for various points of rendevous in preparation for movement to ZERO island on the morning of X-day. Also at this time Dr. Nolan, Dr. Whipple, and Captain Knowlton came aboard the BAIROKO to act as advisors on matters of radiological safety, and Lt. Commander Carr of AFSWP arrived to participate in the first test of the operation.

According to plan, all communications on X-RAY operations from RadSafe missions were directed to the MT MCKINLEY RadSafe Center and monitored by RadOps on the BAIROKO. This provided immediate first hand information for the Radiological Safety Officer aboard the MT MCKINLEY. On succeeding days the plan called for communications direct to RadOps on the BAIROKO. The MT MCKINLEY RadSafe Center also plotted daily possible fallout patterns based on weather forecasts and maintained daily surface and air RadExes (survey showing limits of expected fallout on the surface and of air contamination) for the information of the Radiological Safety Officer. Information from the cloud tracking planes for monitors of TU-7.6.1 was also plotted in this center.

On X-RAY morning the BAIROKO was anchored at an observation point approximately seventeen miles, 340° T from Engebi. At H-plus-20 minutes

a monitor departed by helicopter to monitor the area in the vicinity of the land cable winch on ZERO island and determine the feasibility of scheduled missions attempting to work in that area. He also checked the communication equipment stowed in a cache at the tip of the island beyond ZERO point, and found it to be damaged and inoperable.

On Parry Island a monitor boarded the AVR-53 which departed at H-plus-10 minutes for ZERO island to stand by for air-sea rescue in the event of accident to one of the helicopters. AVR-38 also departed Parry Island at this same hour with a group of five monitors aboard who would be put ashore at ZERO island to accompany urgent missions involving recovery of samples from land cables and from the "gamma stations". One monitor in this latter group remained aboard the AVR to act as monitor for that vessel and to operate the radio until communications could be established ashore.

At about H-plus 45 minutes the BAIROKO got underway, and at a point about 5 miles from ZERO island two TG-7.6 boats, a PPB and LCVP were lowered into the water while underway. These boats, equipped with radios and radar target screens, served as the lagoon reentry patrol. With monitors and radiomen aboard they preceded reentry into the vicinity of ZERO island, monitoring water intensities and radioing the information in code to RadOps. By the use of radar tracking, RadOps plotted a continuous track of these boats on a chart overlay, marking intensities where indicated by radioed information. Later, when the BAIROKO had anchored off ZERO island, these boats continued with a survey of the lagoon area. On this latter mission they followed a prescribed course, and the same system of recording intensities prevailed.

One of the high priority missions on X-RAY day was that of the crater sample recovery. This party proceeded to ZERO island by LCM at H-plus-3 hours and beached near a revetment protecting the crater sample recovery tank. They were met there by Dr. Bowman who had arrived on the island from Eniwetok by helicopter. The tank was guided into the crater by remote control from a helicopter to scoop out earth samples. In the event that the helicopter and its standby were unable to control the tank the LCM was prepared to act as the remote control station. The tank made two trips into the crater and returned with samples but these were not considered as having sufficiently high radiation intensities. The tank was directed into the crater for the third time but became bogged down. The most representative of the samples obtained was divided; the major part for Dr. Bowman's laboratory on Eniwetok Island and the other for the TG-7.6 laboratory aboard the BAIROKO for analysis in connection with technical measurements projects being carried out in the interest of radiological safety.

The ZERO island radiological safety survey was started on X-plus-1 day. Intensity readings were taken at various spots on the island which had been marked with numbered stakes. These intensity readings were immediately transmitted in code via radio to RadOps on the CVE where iso-intensity lines were then plotted on overlays of island charts.

On X-plus-1 numerous biological samples were collected and returned to the ship for further disposition. Film badges which had been placed in various spots over the island were collected and brought back for processing. At this time Comdr. Winant, Lt. Col. Houghton, Comdr.

Andrews, Lt. Comdr. Campbell, Major Stone and Dr. Bowers made a trip to ZERO island and checked the perimeter of the crater by breaking into two parties.

On X-plus-2 day Dr. Froman, Capt. Russell, Mr. Benson, and Comdr. Winant went ashore on ZERO island to inspect AEC equipment to determine what was salvagable.

During the week subsequent to X-RAY day many routine operations were carried out in connection with collection of data. Biological samples, film badges, photographs, and other exposed materials continued to be recovered. Dirt samples were taken from the vicinity of the personnel landing on ZERO island and water samples collected along the reef north and west of the BAIROKO berth. These were turned over to TG-7.6 laboratory for analysis.

Equipment from the cache located on the tip of ZERO island furthest from the ZERO point was recovered. This cache had partially collapsed as a result of the detonation and a small part of the equipment received minor damage.

A lagoon perimeter island survey was conducted, as well as a survey of recreational beaches throughout the lagoon area.

Dust collectors were operated on all vessels and periodic checks made of ship evaporators for contamination.

By X-plus-5 the restrictions on ZERO island were reduced materially because of low radioactivity and absence of contamination. One monitor was posted at the personnel landing during the working day and parties were briefed as they came ashore and checked for contamination prior to

leaving the island. A 12½ mr/hr line was established beyond which workers and those on routine missions were not permitted to go without monitors. Two monitors acted as a roving detail. Film badges, pocket dosimeters and party monitors were provided for those who had to go beyond this line.

On X-plus-8, Major Richard I. Moss, USMC of AFSWP joined the Task Group.

YOKE Test.

Preparations for YOKE day were carried out with greater precision than was demonstrated for the X-RAY shot. By this time all personnel concerned had a much better understanding of the problems involved and practical experience in meeting them.

Since the basic plan for YOKE operations followed the same pattern of X-RAY, RadSafe activities became virtually a repetition of those accomplished for the initial test. The major difference was in the technical measurements which were varied to conform to a different outlay of test structures.

The schedule of missions for YOKE conformed to the same type and procedure as for X-RAY, but wherever practical, personnel were reassigned from one group to another in order that they might gain broad experience in various field radiological problems.

An operations schedule for the movement of all monitors from Y-minus-4 through Y-plus-1 was published and distributed to all concerned. Monitors were thoroughly briefed in their particular missions.

On the afternoon of Y-minus-1, YOKE day was postponed one day. For the most part this merely involved setting back the schedule accordingly. However, it did necessitate return of certain personnel of the technical measurements unit to the LCM "Lame Duck," anchored downwind from ZERO point, to refuel generators and reset clocks on the cascade impactors. The Technical Measurements Unit also checked materials at other installations, replacing those which had become damaged by showers or long exposure to the sun.

On the morning of YOKE day the BAIROKO was anchored about 14 miles from ZERO island, and at about H-plus-30 minutes got underway. The lagoon reentry patrol boats for this operation were put in the water before the CVE got underway, preceding reentry into the ZERO area and checking intensities over the entire distance from the pre-shot anchorage to the new berth in the vicinity of ZERO island. The number of these reentry patrol boats was increased for YOKE day; four from the BAIROKO and two from the MT MCKINLEY.

Meanwhile various other scheduled RadSafe missions followed the same pattern of operations which this report has outlined for Test X-RAY. All of these missions were accomplished successfully, and in most cases were completed ahead of schedule.

An additional mission on YOKE day was accomplished by a party of medical officers who explored islands in the immediate vicinity of the test site in an attempt to recover flora and fauna to be used to study the effects of the weapon upon them.

On Y-plus-1 a survey of ZERO island was completed and detailed charts showing activity found were delivered to the Scientific Director and to the Radiological Safety Officer.

The recovery of samples to be used in obtaining technical measurements data continued as did work on lagoon water surveys.

A resurvey of the ZERO island and collection of soil samples from the vicinity of blast footings was carried out on Y-plus 2. Additional crater survey operations were also completed at this time.

A survey of perimeter islands was conducted to determine the presence of any fallout or water contamination. This information was reported in detail to the RadOps where a complete report was prepared.

Equipment which had been cached on the ZERO island was recovered and showed only slight evidence of damage.

On Y-plus-9, Captain Draeger and Comdr. Langer departed for the United States to begin work on their samples.

ZEBRA Test.

Following the same procedure as for previous tests, preparations for ZEBRA were accomplished in a manner which appreciably reflected experience.

The mission for ZEBRA involved essentially the same schedule as before. A new schedule was prepared, and the policy of shifting assignments of individuals in order to broaden their scope of experience was again effected.

On Z-minus-3, Commander Alvin W. Slayden, USN of Op-36E, Lt. Colonel William S. Cowart, USAF, and Commander Thomas R. Fonick, Commander, Rear Echelon, TG-7.6 arrived aboard the CAIROKO from Washington to observe the ZEBRA shot.

ZEBRA day operations followed the same pattern of previous tests. One of the early missions, involving the land cable sample recovery, ran into difficulty when the wire cable became snagged somewhere in the vicinity of the crater. These samples were of considerable scientific value and, since it was found to be impossible to recover them by reeling in the cable by winch, a jeep was utilized and thus all but one sample was finally recovered. In the period of time involved in this mission it became apparent that the scientists and monitors assigned to the task would soon exceed the allowable radiation exposure tolerance. To meet this situation a quick on-the-spot reassignment of personnel then on shore performing other missions involving lesser radiation intensities was made. Thus the maximum amount of work was accomplished by utilizing these people to the limit of their exposure allowance.

The long narrow shape of ZEBRA island, with ZERO point located at one end, made the island survey easier than it had been on previous tests. Admiral Parsons participated in this survey which was completed on Z-plus-1 by a small party. They also collected soil samples at each blast footing for the purpose of determining the extent of contamination.

By Z-plus-1 it was apparent that the south end of ZERO island would possibly be ready for the establishment of monitor guards and routine RadSafe control much sooner than had been practical on previous tests. In view of this possibility an acceleration of the entire operation was foreseen.

Commander Hoffman departed on Z plus-1 for the United States to take up his new duties as Chief of the Radiological Safety Division for the Bureau of Ships.

Crater Surveys.

The craters formed by the tests on the islands in Operation SANDSTONE were not "craters" in the general sense of the term. The detonation of the test weapon did not remove a large amount of soil and leave a pit of large proportions. In these cases only a slight saucer-like depression immediately in the vicinity of the test remained following the blast. The crater involved in these radiological surveys was defined as the area surrounding the ZERO point in which variation of radiation intensities was independent of the distance from ZERO. In this area it was not practical to plot the iso-intensity lines as was done on the island surveys. The high intensity of the radiation immediately surrounding the ZERO point prevented any approach to this crater area until several days following the test.

Permission was secured to make the crater survey a mission of 300 mr limit. Plans for the crater surveys were worked out in considerable detail prior to the operation. Each member was carefully briefed and the exact path which was to be followed was carefully worked out in advance so that the maximum number of readings could be made in a minimum time. Monitors started their survey in the vicinity of ZERO point and walked on a previously determined course away from the center of the area covered by the blast outward to a distance of about 200 yards, taking readings at 10 yard intervals. These readings were later plotted by RadOps and a reasonably accurate picture was obtained of the intensities in the area covered by the survey.

All of the surveys were completed well within the limit of exposure established for the mission. The results were very effective in completing studies of the radiation intensities on the islands.

Restriction of Islands.

Early in the operations, it was decided at a conference that as a result of radiological studies CTG-7.6 would recommend which islands would be restricted to all personnel because of radiological intensities and which would be opened for further work and for recreation. Accordingly, as soon as possible following each test, extensive surveys were made of all islands in the atoll to determine the extent of radioactive fallout. The recommendations made as a result of this study were accepted, and provided CJTF-7 with the desired information as to safety in the lagoon. It permitted the planning of scientific missions which required working on the islands and the designation of beach and recreational facilities safe for use. The original sequence of and locations for the atomic tests were selected in advance so that the prevailing weather conditions would confine radioactivity to a progressively expanding area and at the end of the tests the islands of Parry and Eniwetok, on which the garrisons were stationed, would remain free of fallout and consequently be radiologically safe for occupation.

Proposed Technical Report.

On 3 May CTG-7.6 dispatched a letter to the Radiological Safety Officer in which it was proposed that TG-7.6 initiate the compilation of a Technical Report on Radiological Safety at Operation SANDSTONE. It was planned that the report would be completed by AFSWT personnel

currently assigned to TG-7.6 after dissolution of the Task Force, and would be in addition to all other reports presently required. Its objective would be to assist in preparing for future operations of the same nature as well as provide guidance for Radiological Defense. The proposal requested that the plan be discussed with the Scientific Director from the standpoint of feasibility and to determine its status as a Task Force or AEC document since, by its nature, the report would necessarily contain AEA Restricted Data. In order that the writing of this report, would not interfere with the writing of the Scientific Report it was proposed that the completion date of the Technical Report by 30 July 1948. It was anticipated that this report would include studies such as the following:

(a) Fallout.
(b) ZERO island radioactivity surveys.
(c) Lagoon water survey.
(d) Evaluation of crater dust hazards.
(e) Effects on animal and bird life at Eniwetok.
(f) Decontamination of aircraft.
(g) Statistics of personnel exposure.
(h) Field performance of RadSafe instruments.
(i) Evaluation of RadSafe Training.

It was planned to assign these studies to various members of the group for collection and collation of data with further analyses in AFSWP.

[redacted]

CHAPTER 9

TASK UNIT INTERIM REPORTS AT THE TEST SITE

Technical Measurements.

Prior to the arrival of the Task Group at Eniwetok, Lt. E. C. Vicars, USN had flown to the test site as advance representative for Task Unit 7.6.6, arriving on 5 March. On this mission Lt. Vicars assisted in the planning for island construction necessary to accommodate installations for technical measurements projects to be carried out by TG 7.6. Meeting with representatives of TG 7.2 and the staff of General Hull, he outlined the program in detail and continued to attend the regular staff meetings of TG 7.2 as representative of TU 7.6.6. During the following period, until the arrival of the BAIROKO, Lt. Vicars made several trips to each of the ZERO islands in order to become familiar with the personnel in charge of island construction, the facilities available for use by the Technical Measurements Unit and the relation of their work to that being carried on by the Bureau of Yards and Docks and Office of the Corps of Engineers.

When the BAIROKO reached Eniwetok Atoll it was first anchored off Eniwetok Island. It was considered advisable to move all materials required for the technical measurements under TG 7.6 along with a group of operating personnel ashore on Engebi Island. This was accomplished within a few days after arrival.

Technical measurements being carried out under TU 7.6.6 were quite diverse in nature but in most cases relatively simple. Many measurements involved the exposure of materials on stakes driven into the

[redacted]

ground. These included the film badges for measuring gamma radiation as a function of distance, and the heat sensitivity papers. These stakes had to be driven along two radii on Engebi and on the adjacent upwind islands. Shields consisting of steel plates and concrete blocks were fixed in position. At several stations racks were installed for the exposure of panels to measure heat sensitivity. In addition, special panels were prepared containing as many as 50 different materials consisting of papers, woods, etc., with different types of light filters in order to measure the spectral and time distribution of the optical radiation . Two test animal containers were positioned on land and two were anchored at the proper distances off shore. The heavy steel cylinders for the exposure of biological materials at close range were located at several distances.

Much of the work involved in these preparations was primarily manual labor and could have been carried out quite satisfactorily with a working party under the direction of the project officer. The enlisted complement of TG 7.6 was limited to a small number of specialized personnel required for other duties. Therefore it was necessary to obtain volunteers from the officer monitors when they were not involved in preparations for their normal duties. In future operations it appears desirable to increase the enlisted complement of a similar Task Unit.

One phase of the pre-test operations of TU 7.6.6 consisted of determining the sensitivity of the Test materials through normal exposure of heat, humidity, and wind. The biological exposure cans were located in position and painted or covered with a variety of materials. Some were

painted white, some were painted with aluminum paint, others were covered with glass wool, and still others had wooden sun-shades erected. The temperature inside these containers was measured daily with maximum and minimum thermometers and it was determined that the white paint proved the best protection from the solar radiation. The prevailing wind was of considerable assistance in keeping the containers cool. Similar studies were conducted to determine the maximum and minimum temperatures and within the Yards and Docks and Corps of Engineers structures and within the land and water test animal containers. Film badges were exposed for varying periods in the sunlight to be used as controls for the badges exposed during the tests.

The two Chemical Corps projects under the cognizance of TU 7.6.6, the measurement of particle size by means of cascade impactors and the test of collective protectors for the removal of radioactive materials involved somewhat complicated installations within the OCE structures. The cascade impactors were battery operated and involved relatively simple installation, but unfortunately, in two of the structures slight alterations were required in order to attach the inlet of the cascade impactor to the one-inch pipe through the wall of the structure. However, installation of four cascade impactors was accomplished and the equipment operated satisfactorily.

The test of the collective protectors was somewhat more complicated since it was necessary to install some means of measuring the concentration of radioactive materials in the effluent air stream of the protector. This was to be accomplished by means of a ratemeter with a beta sensitive geiger tube in the air stream and an Esterline Angus

Recorder. The collective protector was powered with a gasoline engine and the ratemeter with a gasoline driven generator. Considerable difficulty was encountered in keeping the gasoline generator operating over the full 24-hour period required as the equipment had to be started on the morning of X-Ray-minum-one day and had to operate continually until after the detonation. The generators available were small and not designed for such continuous use.

On 5 April 1948 a meeting was called by the Scientific Director to discuss the service tests and at that time it was concluded that the 1000 foot Corps of Engineers structure stood little chance of standing up under the blast. It was considered unwise to place the equipment in a structure which was apparently doomed and from which there could consequently be no record obtained. Therefore, it was decided to remove the collective protector from this structure and place it in a small boat downwind. An LCVP which was due for survey was procured from TG 7.3 for this purpose. Immediately following PETER-X-Ray day the collective protector, along with the ratemeter and other recording equipment was removed from the 1000 foot structure and loaded aboard the LCVP which was given the code name, "Dead Duck". Because of the continual difficulties which had been experienced with the generators, two new ones were procured by TG 7.1 from TG 7.2. The larger of these, a 5 kw generator, was placed in the LCVP and a smaller one in the 1500 foot OCE structure. Both of these installations were then given satisfactory 24-hour test runs and the LCVP was installed in position about 2500 yards downwind on X-Ray-minus two. On X-Ray-minus-one,

just as the party was setting out to start the engines for the X-Ray test it was noted that the "Dead Duck" was very low in the water. A salvage party was rushed to the scene but before the party arrived the LCVP sank at 0945 on X-Ray-minus-one. A party on shore was to start the generators in the OCE structure. They discovered that one of the generators could not be made to operate, therefore, the ratemeter was removed to prevent its possible destruction during the test. This proved fortunate since the structure was moved a considerable distance by the explosion.

On PETER-X-Ray a token placement of different exposure materials had been undertaken in order to test the efficiency of the methods employed. No particular problems developed as a result of this rehearsal and therefore on X-Ray-minus-four placement of materials was commenced. Previous to this the only film badges which had been installed were those located in the Yards and Docks structures which had to be sealed well in advance of test time. On X-Ray-minus-four the badges were placed in the Corps of Engineers structures and on the two succeeding days behind the BuShips steel and concrete shields. On X-Ray-minus-two the film badges and heat sensitivity materials were placed on the islands adjacent to Engebi. During this period the panels and plaques to be used for studying thermal radiation were installed and covered to prevent exposure to rain. On the morning of X-Ray-minus-one, four members of TU 7.6.6 went ashore on Engebi to place biological materials in cans, to remove covers from heat sensitive plaques and to install film badges and heat sensitive papers on exposed

stakes. These materials would be used for measurement of the nuclear and thermal radiation as a function of distance. Distribution was carried out without difficulty and final preparations for test X-Ray were completed by noon on X-Ray-minus-one.

The following is an estimate of results obtained from various projects under TU 7.6.6 carried out during test X-Ray. These projects were outlined elsewhere in this report (Ch 4, pp 20-21; Ch 6, pp 46-47) and are covered in detail in Annex "G", OpPlan 1-48, TG 7.6.

Project 7.1-17/RS-1 - Gamma Radiation vs Distance

Exposed films were recovered intact from Muzin and Karinian Islands (2200-4000 yds). Most of the completely exposed films on Engebi were destroyed due to ignition of the aluminum foil covering but a few which had not been too greatly damaged were recovered and may provide occasional values. However, many films were recovered which had been given only small amounts of steel shielding (¼") and these should be quite satisfactory for determining the gamma radiation as a function of distance after a slight correction has been applied. All films have been returned to Dr. Taylor at National Bureau of Standards for development and final results are not yet available. In Test Yoke a thin shield with an air space between it and the film was placed in front of the film badge in order to avoid ignition of the aluminum foil.

Project 7.1-17/RS-2 - Gamma Radiation Shielding

Films were recovered from all BuShips' steel plates and concrete slabs and from within four OCE structures, and most of the Yards and Docks structures.

[redacted]

Project 7.1-17/RS-3 – Residual Contamination in Crater

A sample of crater material was obtained from the drone tank and gamma and beta decay measurements were commenced at H-plus-8-hour. In addition to this sample, others were obtained on X-Ray-plus-six-day. These consisted of cores and surface material collected at 100 feet intervals along a radius from 1200 feet in to the base of the tower. The specific alpha and beta plus gamma activity as a function of distance and depth in the ground was obtained and will be compared with the crater material. This project was even more successful and useful than anticipated.

Project 7.1-17/RS(BA)-4 – Aerial Survey of Ground Contamination

Aerial surveys of the crater were made at altitudes from 7000 to 1000 feet beginning at H-plus-1-hour and from 5000 to 500 feet on X-Ray-plus-1-day. A further aerial survey was conducted on X-Ray-plus-6-day when the crater could also be surveyed by ground monitors. Final analysis of the data is awaiting completion of the decay curves but it appears that excellent results were obtained from these surveys. The maximum readings at each altitude were reproducible, and a smooth curve was obtained for the variation of these maximum readings as a function of altitude. This method of survey appears very promising for operational purposes and the instruments used appeared satisfactory for this type of work. This project apparently was entirely successful, but flights at lower altitudes soon after the detonation seem desirable.

Project 7.1-17/RS(BS)-5 - Exposure of Panels for decontamination and heat sensitivity studies

The exposed panels were recovered at all stations. None were contaminated and data were obtained for analysis of the heat sensitivity of the panels.

Project 7.1-17/RS-6 - Neutron Absorption

Eight samples of sulphur were exposed in test X-Ray. Seven of these were recovered intact and the eighth which had been located in the 1000 foot OCE structure was found to have been sheared by the door when it was blown into the structure and only a part of the sample was recovered. All samples were returned to LAJ-3 to permit counting the induced activity. It is understood that LAJ-3 recovered sufficient unshielded sulphur samples to permit measurement of the unshielded neutron flux so it appears that the results of this project will be successful. It should be mentioned, however, that the sulphur measurements alone do not give a complete practical answer as to the physiological importance of the neutron flux, since a knowledge of the spectrum as a function of distance is also needed. Unfortunately many of the LAJ-3 samples needed to make this measurement were not recovered.

Project 7.1-17/RS-7 - Radioactivity in the Cloud

Film badges were recovered from all drone planes upon their return to base. Readings from these badges when correlated with the path of the planes through the cloud should give a satisfactory answer for the radiation field in the cloud at different altitudes.

Project 7.1-17/RS(CC)-8 - Test of Efficiency of Field Collective Protector

The collective protector in an OCE structure was sheared from the inlet pipe when the structure turned over and consequently failed to collect a sample. The only positive information obtained from this project is that the filters were undamaged by the blast pressure at this specific distance and that the equipment would probably have operated satisfactorily, if the structure had remained upright. The other collective protector in the boat downwind sank prior to the test. Its removal from the 1000 foot structure did not involve the loss of any information since the blast would have prevented obtaining any data concerning the 1000 foot structure. Two new collective protectors were obtained for installation in the LCM downwind in tests Yoke and Zebra.

Project 7.1-17/RS(CC)-9 - Particle Size of Material in Cloud

Despite the fact that OCE structures were moved a considerable distance the impactors operated properly and collected samples of dust stirred up by the explosion. No final correlation with particle size has yet been made since it is planned to study the slides with an electron microscope at Edgewood, Md. A cascade impactor will be placed in an LCM located downwind about 2500 yards and also one in a drone plane at 16,000 feet for test Yoke.

Project 7.1-17/RS-10 - Thermal Radiation Papers

Only a few samples of Dr. Penny's paper on the plyboard squares were not burned. In test Yoke the papers will be placed at greater distances than at test X-Ray in order to obtain additional points.

Project 7.1-17/RS(BS BM)-11 - Test of Crystal Dosimeters

Crystal dosimeters which had been exposed at distances from 300 to 2100 yards were recovered. The data from these dosimeters will be correlated with the gamma radiation vs distance data as obtained from the films. The results from test X-Ray will be considered in the placement of the dosimeters for test Yoke.

Project 7.1-17/RS(BM)-12 - Exposure of Biological Assay Material

All exposed materials were recovered. All the cans, some of which were located as close as 1000 feet were blown off their supports but this produced only negligible damage to the materials. While lying on the ground the temperature did rise to 110° F from exposure to the sun but it is considered that this was not sufficient to damage the samples except possibly the neurospora. There was also a delay in the courier shipment of the neurospora to California Institute of Technology, but a special trip was arranged so that this material was probably not lost for study.

Project 7.1-17/RS(BM)-13 - Thermal Radiation Plaques

Recovery of exposed materials will give a fair value of energy radiation. A rough estimate of color distribution and some idea of the duration of the important part of the radiation at specific distances will be obtained. Shadows will give an indication of the extent of the ball of fire. Birds brought down at these distances will also give a check on energy flux. There will be some evidence on the time of radiation and the size of the ball of fire in its effective phase. The effect

of dust or moisture in distorting the measurements will be an important result of test X-Ray when given further study.

Project 7.1-17/RS(HU)-14 - Test of Animal Containers for suitability for exposing animals at close range

All four animal tanks survived without evidence of blast damage. The temperature in the land tanks due to the sun, rose to about 100° F while the tanks in water reached a maximum daily temperature of around 90° F. For test Yoke these tanks will be ballasted to float 50% submerged.

Between test X-Ray and test Yoke efforts were made to modify the various experiments being conducted in order to overcome some of the difficulties which developed during the first test. The most important of these was to provide some protection for the film badges in order to minimize their destruction by the intense heat and by the sand stirred up by the blast wave. This was accomplished by wrapping the badges in a layer of glass cloth and then placing a thin sheet of aluminum in front. Because of the high intensities of thermal and nuclear radiation detected during the X-Ray test additional stations were set up on adjacent islands for the placement of film badges and heat sensitive papers at greater distances. For greater protection at close range and to provide more precise data the thermal radiation plaques were in some cases placed behind pinhole devices and also located so that the blast pressure wave would halt the exposure.

As a replacement for the "Dead Duck" which sank prior to test X-Ray an ICM with the code name "Lame Duck" was procured through TG 7.3 for testing a field collective protector. Since both of the protectors available for Operation SANDSTONE had been destroyed in test X-Ray two additional

ones, using electrically driven blowers were shipped by air from the ZI and arrived on Yoke-minus-3-day. One of these was installed upon arrival and after a 24-hour check the "Lame Duck" was anchored in position about a mile downwind from the Zero tower. In addition to the field collective protector, a cascade impactor was also placed in the LCM for the measurement of the particle size of the material falling from the cloud. Another cascade impactor was located ashore on Rujoru Island. Because of the interest shown in the particle size of the cloud material and its relationship to the problem of fallout, Colonel Cooney secured permission to place one cascade impactor in a drone plane.

No other major changes were made in the tests being carried out within TU 7.6.6 for test Yoke. Nearly all the instruments and measuring devices were in position prior to Yoke-minus-2-day and final operations were conducted without incident on the morning of Yoke-minus-1-day. The postponement of Yoke by one day necessitated the return of personnel to the "Lame Duck" to refuel the motor-generator set and reset the clocks on the cascade impactors. The heat sensitive materials in some cases required replacing because of damage by the frequent showers. Biological materials which might be damaged by long exposure at high temperatures were removed and replaced on the new Yoke-minus-1-day. The postponement did not have any effect on the success of the various scientific projects being carried out by TU 7.6.6.

Beginning on the afternoon of Yoke-day collection of the various instruments and exposed materials was commenced. The protection provided for the film badges proved quite adequate and exposed films were collected

as close as 400 yards from Zero point. Since the 700 yard station was placed just on the near side of the channel separating Aoman and Bijjiri Islands part of the information from this station was lost because the blast knocked some of the structures into the water. A large fraction of the cans for the exposure of biological materials were blown into this channel. Some of these were located by helicopter and then recovered on the next day using a rubber life raft and underwater goggles. The biological cans from the close-in station were never located and it seems likely that these were blown out into the ocean. Despite the tremendous effects of the blast the recovery of most of the items belonging to TU 7.6.6 was very successful. The one project which again failed to produce any results was the test of the field collective protector. The blast pressure stopped the generator motor and threw out the safety release so that it failed to restart. This power failure stopped both the collective protector and the measuring devices. Steps were taken to prevent a recurrence of this accident in test Zebra by installing automatic starting equipment and disconnecting the relays. However, the cascade impactors in all three stations, the "Lame Duck", Rujuro Island, and the drone at 16,000 feet operated successfully and radioactive dust samples were obtained. The animal tanks were all undamaged by the blast but the close-in raft was overturned.

Following test Yoke both Captain Draeger and Commander Langer collected their materials and prepared them for shipment back to the United States for further analysis.

The Scientific Director called a meeting of all persons involved in making measurements of gamma radiation and neutron flux in order to determine whether film badges could be satisfactorily used for the measurement of gamma radiation. This meeting proved to be extremely fruitful and emphasized the desirability of frequent contacts between the various groups carrying out measurements in the same fields. As a result of this meeting several new ideas were expressed and in order to clarify certain points and obtain confirming data the measurements originally planned for the Zebra shot were slightly amplified. The steel and concrete shields which had not been scheduled for Zebra were relocated on Runit and in addition to placing film badges between the shields, packets containing sulphur, arsenic and phosphorous were inserted to measure the neutron flux. All installations for the Zebra shot were completed on Zebra-minus-2-day so that only minor checking was required on the morning of Zebra-minus-1-day. In order to hasten the collection of film badges and neutron detectors after the shot a 300 mr mission was scheduled for 1400 on Zebra-day with the approval of the Scientific Director and Colonel Cooney.

Commander Hoffman and Lt. Vicars, accompanied by monitors, went ashore on Zero island at 1400 on Zebra-day to collect film badges, neutron detectors and heat sensitive papers. This mission was very successful and all equipment except that which was in the two stations nearest zero point was recovered without unduly exposing members of the party to radioactivity. With a few exceptions films were in excellent condition and provided good records of the extent of gamma radiation.

On Zebra-day and Z-plus-1-day the C-47 survey plane carried out its mission obtaining excellent data which could be correlated with the surface gamma radiation measurements.

During the morning of Zebra-day one of the lagoon radiological safety patrol craft visited the "Lame Duck" and discovered that there was no evidence of recent contamination. They refueled the gasoline motor so that equipment would be operating in the event delayed fallout occurred from cloud material. Inspection of the equipment later on showed no indications of fallout and consequently no records were obtained from the collective protector or cascade impactor. Nevertheless, some film badges and one excellent sample of heat sensitive paper were recovered. An unusual wind condition existed at the time of the shot and all surface fallout occurred to the north of Zero point rather than to the west where it might normally have been expected to occur.

Medical Records.

The period 15 March 1948 to 14 April 1948 was utilized by the Medical Records unit for the most part in reading and filing physical examination reports. Records of exposures incidental to calibration of instruments were also kept current.

On 16 March 1948 a report was submitted to CTG 7.6 showing the status of TG 7.6 personnel regarding compliance with medical record requirements. Several deficiencies in the medical records were noted, and within the next five days they were corrected. During the following two weeks action was taken to correct any deficiencies in medical records of all personnel of the Task Force. On 20 March 1948 RADSAFE Letter Number FOUR was

published by CTG 7.6 to all Task Group Commanders, requesting the co-operation of all groups in completing medical requirements. (See Appendix "F") A roll-up plan for TU 7.6.5 was submitted on 21 March 1948 and subsequently approved.

On 9 April Colonel Cooney visited the BAIROKO for a conference concerning medical records. Existing records were discussed and procedures to improve them were worked out.

On X-Ray-day, film badges and monitor cards began to come in at 1200 and by 2200 over 250 were received. At 0300 on X-plus-one-day all films were processed and over tolerance report to CJTF-7 was released. The work load on X-plus-one-day was approximately the same and the over tolerance dispatch was completed at 0400 on X-plus-two-day. Beginning on the night of X-plus-two-day the system of film processing was accelerated by segregating all dark or questionable badges and processing them first, thus permitting the completion of the over tolerance report by midnight. This system proved satisfactory and was continued throughout the tests.

On X-plus-five-day the Kardex file was checked and all over tolerance exposures were recorded. The final information on over exposures for test X-Ray was submitted on X-Ray-plus-13-day in the post shot report. Normal routine was followed in processing and reporting exposure information as work in radioactive areas continued.

On X-plus-4-day permission was obtained from CJTF-7 to change the method of submitting over tolerance reports. Up to that date all individual exposures in excess of 100 mr/day had been reported daily. Thereafter no individual was reported by dispatch unless he received a total of more than 300 mr in 3 days. Routine records of exposure were prepared for dissemination as before.

By Y-plus-6-day the work load dropped to normal level and the Yoke post shot report was compiled and submitted to CJTF-7 on Y-plus-14-day.

Procedures used throughout the first two tests were continued for Zebra. On Z-plus-1-day a dispatch was received from CJTF-7 concerning entries on the Physical Records of all USN and USMC personnel. A conference of medical officers and CTG 7.6 devised a report form which would supply all Task Group Commanders with the necessary exposure data. It was planned to compile these reports before arrival in Pearl Harbor on the return voyage upon completion of operation at the test site.

[redacted]

UNCLASSIFIED

CHAPTER 10

AIR MONITOR UNIT

INTRODUCTION

The Air Monitor Unit, Task Unit 7.6.1, arrived at Kwajalein Atoll on 17 March 1948 to participate in Operation SANDSTONE. The mission of this unit was twofold: primarily to insure the radiological safety of Air Task Group 7.4 and secondarily to obtain, compile and evaluate data likely to be of value to the AEC or Department of National Defense. This unit consisted of 24 officers and was commanded by Col. Robert N. Isbell.

ACTIVITIES

Col. Isbell and Lt. Col. Cody discussed the mission of Task Unit 7.6.1 with Lt. Col. Jennings, C/S of ATG 7.4, shortly after arriving at Kwajalein. Coordination and assistance on such problems as housing, messing, supply, operations and administration were agreed upon. ATG 7.4 personnel completed the erection of such installations as were required by 22 March 1948 and the task Unit was ready for operations by 24 March 1948.

Instruments arrived on 20 March and were placed in temporary storage until a suitable storage box was constructed from an abandoned cold storage reefer. These included 50 G-M type instruments, 55 ion chamber type instruments, 150 pocket dosimeters and other auxiliary equipment including a radium source.

Projects immediately undertaken included publication of operational memoranda, assignment of monitors to mission aircraft, indoctrination and

[redacted]

ground training of monitors for flying operations, construction of personnel decontamination and instrument calibration facilities, orientation and indoctrination of ATG 7.4 personnel, evaluation of instrument performance at high altitudes, photographic documentation, detailed operational planning for test days and monitor indoctrination flights.

Manned aircraft initially scheduled to participate in the air operation consisted of the following:

1	Official Observer	C-54
1	Air Command	B-29
3	Cloud tracking	B-29
3	Air-sea rescue	1-OA-10 2-HTM
1	Spotter	B-17
4	Photographic	2-C-54 2-B-29
12	Drone Mother	B-17
1	Radiological survey	C-47

however this schedule was later revised to include two additional cloud tracking aircraft and one additional photographic aircraft. LCdr E. R. King joined the unit on 24 March to perform the radiological survey mission. Eight, unmanned drone aircraft carrying air sample filters and total range film badges were to be sent through the atomic cloud on test days to obtain air samples and measure radiation intensities.

Monitors from the air monitor unit were to accompany each manned aircraft in the test area on shot days to insure that no aircraft would enter an area where the radiation intensity was greater than 100 mr/hr. Other tasks in connection with the tests consisted of drone aircraft monitoring and decontamination operations at Eniwetok, aircraft monitoring

and personnel decontamination operations at Kwajalein, cloud tracking operations until H plus 108 hours, instrument maintenance and recalibration operations, preparation of medical dosimetric records and compilation of mission reports.

Each monitor completed an average of two training flights with his assigned crew prior to Peter X-ray Day. The flights were extremely valuable in that each monitor was able to work out radiological safety procedures that, while adequate, would not hamper the primary mission. Instrument performance data began to be accumulated and as a result of these data considerable changes became necessary in instrumentation procedures.

Initial practice missions showed that altitudes of 10,000' or higher had a definite effect on ion chamber type instruments. In general all ion chamber instruments, except the Beckman MX-6 Gamma Survey Meter which had a sealed case, failed due to rupture of the ion chamber. This problem was solved by modification of the instruments to include an air hole in the chamber and by calibration of the instrument at the altitude for which it was to be used. Capt. Matthews designed and supervised construction of an experimental instrument pressure tank which operated off the radar pressurizing system of a B-17 aircraft. Tests showed this tank to be excellent and instruments could be used in it without air calibration.

A personnel decontamination center was constructed at Kwajalein and placed in operation prior to X-ray Day.

Problems which hampered Task Unit 7.6.1 during this phase stemmed mainly from its lack of clerical personnel and inadequate equipment, except

for radiation measurement instruments. Maj. Crow, Unit Supply Officer, did an outstanding job in procuring supplies and equipment from any and all sources. Clerical assistance was obtained from ATG 7.4 but was never available in adequate amounts during the entire operation.

By Peter X-ray Day the unit had mapped out radiological safety procedure aboard aircraft, was well along on the high altitude instrument calibration program, had completed operational plans for test days, was plotting radexs daily, had published pertinent mission report forms, had the personnel decontamination center at Kwajalein almost ready for operation, was well underway on the photographic documentation project and had completed the indoctrination of ATG 7.4 personnel.

PETER X-RAY DAY

This full scale dress rehearsal commenced with general and specialized briefings held at Kwajalein on Peter X-ray Day minus one. This same day at 1500 hours the drone aircraft, manned by safety crews, and four drone mother aircraft departed for Eniwetok to stage. Monitors accompanying these aircraft were completely equipped except for film badges which were not used on this mission. At Eniwetok AEC personnel installed air sample filters on the drone aircraft and three of the monitors simulated installation of the drone film badges. One monitor prepared the radexs. By H - 4 hours all drone and mother aircraft at Eniwetok were prepared and awaiting arrival of the remaining mother aircraft from Kwajalein. Meantime, at Kwajalein, the remainder of ATG 7.4 and T.U. 7.6.1 were making final preparations. Radexs were completed at 2000 hours and at 2300 hours, Peter X-ray Day minus one, aircraft commenced departure for

Eniwetok and the target area. Pick-up of drone aircraft at Eniwetok was completed by H - 2 hours and by H hour all aircraft were on their stations. Radiological safety procedure aboard aircraft consisted of the following:

(1) H - 30 minutes. Instruments turned on.
(2) H - 5 minutes. Cabin heaters shut off and all crew members on 100% oxygen.
(3) H - 10 seconds. All crews adjust dark goggles.
(4) After detonation. Remove goggles, observe burst phenomena and monitor watch instruments.
(5) After leaving area. Monitor interior of aircraft.
(6) After landing. Monitor crew and exterior of aircraft.

The rehearsal was successful in general. It was found however that ten seconds was too long a time for the pilot to be completely "in the dark" and permission was granted for the pilots, on test days, to cut a small hole in the one lens of the goggles.

The period between Peter X-ray Day and X-ray Day was devoted to preparation for X-ray Day. Complete individual mission flimsies were prepared for each monitor to use on the first test. The personnel decontamination center at Kwajalein was completed and adequate stocks of clothing obtained. The high altitude instrument calibration project was completed. By 13 April preparations for X-ray Day were complete and the unit stood by awaiting implementation of the operation.

X-RAY TEST

This test was carried out in exactly the same manner and on the same time schedule as the rehearsal. Installation of drone aircraft film badges was completed at Eniwetok by 2300 hours of X-ray minus one. Aircraft were on stations at H hour and prepared for the detonations with two exceptions; the B-17 spotter aircraft which had returned to Kwajalein with a defective weather reconnaissance aircraft and the

14,000' drone aircraft which went out of control at H - 2 minutes and crashed. Following the detonation all other aircraft proceeded to carry out their assigned missions without incident and without encountering appreciable radioactivity. The drone aircraft were landed at Eniwetok and all other aircraft returned to Kwajalein.

The period following X-ray Day was a very busy one. Cloud tracker missions were flown until plus five day and the aircraft used for these missions always returned with exterior contamination thereby necessitating monitoring and personnel decontamination operations. Capt. Matthews and five additional monitors returned to Eniwetok on plus one day to supervise drone aircraft decontamination operations and compile data. Two monitors were sent to Guam to handle a problem which arose there in connection with weather reconnaissance aircraft contamination. Additional operations in this period consisted of post X-ray Day photographic aircraft missions, compilation of mission data and monitoring of drone aircraft ground maintenance operations following the return of drone aircraft to Kwajalein on X-ray Day plus five.

During a visit to Kwajalein on 24 April, Col. Cooney gave an informal talk to T.U. 7.6.1 at which time he gave a summary of the results obtained on X-ray Day and stated some of the problems anticipated for Yoke Operations.

A final critique of the X-ray test showed that the overall operation of T.U. 7.6.1 had been very good. The one flaw was that post X-ray Day operations were somewhat disorganized because of unexpected missions which came up. To correct this all monitors were given post mission day assignments for Yoke and Zebra tests.

YOKE TEST

Yoke test operations were carried out in the same manner and on the same approximate time schedule as for X-ray test. Several Additional missions were flown in connection with the operation and T.U. 7.6.1 personnel were pushed to the limit of physical endurance to maintain their operations schedules.

Fall out occurred on Kwajalein on Yoke plus one and a radiological control center was established. Surveys were made and water samples collected for counting. The contamination was short lived however and by Yoke plus three had disappeared.

All operations in connection with the Yoke test were completed by Yoke plus nine and preparations were completed for the Zebra test very shortly thereafter.

ZEBRA TEST

The experience gained on the first two tests, plus the curtailment of operations for the Zebra test, made this operation a comparatively simple one. The test went off without incident. All possible data was obtained.

POST ZEBRA DAY

Col. Isbell departed for Hawaii on Zebra plus two to participate on the Task Force Awards Board and Lt.Col. Cody assumed command of the unit.

On Zebra plus one roll-up of the unit began. Three monitors departed for the ZI on emergency leave. Final missions were completed and equipment turned in.

In a memorandum from CTG 7.6, dated 12 May 1948, to CJTF SEVEN, approved and forwarded by Col. Cooney concerning radiological safety measures in connection with the return of drone aircraft to the ZI, the following recommendations were made:

(a) The responsibility of CTG 7.6 in connection with the radiological safety of these aircraft be terminated upon their arrival at their home base in the ZI.

(b) Proceedings be initiated by Commander, Air Forces, to insure that the home base of these aircraft have necessary RadSafe personnel on duty.

It was decided that the drone aircraft would be cleared for return to the ZI when radioactive contamination had decayed below a 16 mr/hr intensity. Four monitors from T.U. 7.6.1; Lt. Col. Proctor, Capt. Nash, Capt. Land and 1stLt. Buchanan, were detailed to remain and accompany these aircraft back to Eglin Field, Florida.

On Zebra plus four the remainder of T.U. 7.6.1 departed from Kwajalein for Eniwetok. On Zebra plus five the unit rejoined their parent organization T.G. 7.6, aboard the U.S.S. BAIROKO for the return voyage to the United States.

[redacted]

CHAPTER 11

ROLL-UP

General.

Following the ZEBRA test the RadSafe program at the test site became somewhat accelerated since work similar to that following previous tests had to be conducted in conjunction with RadSafe roll-up operations.

By ZEBRA-plus-4 the collection of test materials and survey data at the ZEBRA site was completed, and on this date the RAIRCKO shifted anchorage to join the main task force off Eniwetok Island.

Meanwhile on ZEBRA-plus-2 and 3 a RadSafe survey of Eniwetok Atoll was conducted in conjunction with the final Radiological Status Report. The results of this survey confirmed the prediction that all islands of the northern half of the lagoon were contaminated in varying degrees while those in the southern half were found uncontaminated. The Radiological Status Report of Eniwetok Atoll was submitted on ZEBRA-plus-5 to CJTF-7 and a copy furnished the Post-SANDSTONE Garrison Commander.

During this same period another survey was made of all ships present for the purpose of establishing radiological clearance for vessels and boats prior to their departure for the United States. Results of this survey indicated eligibility of these ships for final clearance, although certain of the blower intake screens read up to normal tolerance which persisted at lower intensities after repeated scrubbing. It was suggested that the inlet screens to supply blowers, where these intensities were indicated, be scraped to the bare metal, repainted and monitored again upon arrival at a Navy Yard. The Radiological Safety Officer concured in

[redacted]

the findings of this report and stated that there was no radioactive hazard to personnel on any ship.

On 20 May all operations at Eniwetok Atoll under surveillance of TG-7.6 had been completed, and it was recommended that the responsibility for radiological safety of the area be transferred to the Commander, Eniwetok Atoll. Captain Meredith Mallory, Jr., MC, USA of this Task Group was left at Eniwetok as acting Post Surgeon and Radiological Safety Officer until arrival of the officer assigned this billet about 1 June 1948.

On 21 May the BAIROKO departed from Eniwetok Atoll with the main Task Force convoy bound for Pearl Harbor and the United States. During this voyage all data and notes taken during operations were reviewed and extraneous material destroyed. Files were prepared for shipment by courier or registered mail from Oakland to AFSWP in Washington, D. C.

Personnel.

As indicated in a previous phase of this report, several members of TG-7.6 had already departed for the United States prior to Test ZEBRA. On ZEBRA-plus-1 Lt. Colonel Cowart departed for Washington, D. C., followed by Dr. Scoville and Major Moss the next day. By ZEBRA-plus-5 many of the monitors and civilian personnel had departed for the ZI.

The Air Monitor Unit closed out operations at Kwajalein and all personnel who were to make the return voyage on the BAIROKO were aboard by ZEBRA-plus-5.

On the day before sailing, Colonel Cocney and YNC Harmon transferred to the BAIROKO from the MT. MCKINLEY.

On 21 May when the BAIROKO sailed for Pearl Harbor the total personnel of TG-7.6 aboard consisted of 36 officers and 13 enlisted men.

When the Task Force arrived at Pearl Harbor on 27 May Colonel Cooney, Commander Winant, Lt. Colonel Houghton, Major McDonnel, Captain Bolen, Lt(jg) Babcock, YNC Croasdell and YNC Smiley debarked from the BAIROKO to attend to various administrative matters in the roll-up of operations. Lt. Commander Oldfield was also transferred at this time to his permanent duty station at Pearl Harbor.

The balance of TG-7.6 personnel remained aboard the BAIROKO on its trip to San Francisco. It is planned that the Task Group will dissolve on 28 May 1948 and that personnel will be released from the Task Force upon arrival at their respective permanent duty stations. Lt. Commander Campbell will remain at Oakland about one week to supervise disposition of TG-7.6 materiel. Also at Oakland Major Stone will assume custody of all files and other classified data of the Task Group to be shipped to Washington, D. C.

Logistics.

Enroute to Pearl Harbor Lt. Commander Campbell assisted in the preparation of a memorandum to CJTF-7 from CTG-7.6 in reply to a previously issued directive from the Task Force Commander on the subject: "Requirements for Future Atomic Tests." This memorandum was to include personnel, material and logistic requirements to be used as a guide for any similar operations in the future.

On ZEBRA-plus-6 the supply section began taking up the individual equipment of the remaining members of the Task Group. This equipment, along with other materiel was packed and marked for shipment while enroute to the United States. All instruments were packed and crated in special shipping boxes built to specifications for their shipment.

In addition to the instruments left for the Post-SANDSTONE Garrison others were left to be used in monitoring the drone planes on their return flight to the ZI. These were as follows:

2 MX-6 Instruments
6 263A "
2 Charging Boxes for Kelly-Koett dosimeters
24 Kelly-Koett, 0.2r dosimeters

Upon the arrival of the drones at Eglin Air Force Base, Florida, the instruments will be packed and shipped to the Scientific Laboratory at Los Alamos in accordance with instructions received from the AEC, where they will be received by Mr. H. S. Allen.

Attached as Appendix "H" to this report is a copy of a memorandum from Mr. Adrian H. Dahl to CTG-7.6, attention Lt. Commander Campbell, dated 3 May 1948, subject; "Packaging and Shipping Requirements for RadSafe Instruments." It was Mr. Dahl's recommendation that a quantity of instruments be held in stock at Los Alamos. In considering the list of instruments for shipment to Los Alamos he endeavored to list only those instruments which had proven to be of field use. Those classes of equipment which proved to be of no great merit for field use or which require further development would be returned to Oak Ridge. Only equipment which he felt reasonably certain would be on hand at Oak Ridge as sufficient surplus stock by 16 June, excluding the TG-7.6 RadSafe instruments, was included to go to Los Alamos. Laboratory equipment such as scalers and count rate meters would be returned to Oak Ridge. Mr. Dahl recommended that facilities be established to keep the Los Alamos stock in operating condition. If at any time an emergency arises in the AEC where the Los Alamos stock instruments are required elsewhere, a written request for

transfer will be issued by him from Oak Ridge. Such a request will be made only in cases of emergencies.

Instruments which had been obtained from BuShips are to be returned to Dr. H. Friedman at the Naval Research Laboratory at Anacostia, D. C. One instrument will be returned to the Naval Damage Control School, Radiological Safety Division, Treasure Island, California. Certain other materials from the service tests will be returned to the Radiation Laboratory, Hunter's Point Naval Shipyard, San Francisco, California, the Naval Research Institute, Bethesda, Maryland, and to the AFSWP, Washington, D. C. At present, no information has been received on the disposition of radium sources but instructions concerning their ultimate destination will undoubtedly be received upon reaching the United States.

All excess clothing and miscellaneous impedimenta will be turned over to the AEC at Oakland, California for disposal. The bulk of the instruments employed in the operation will be sent either to the Instrument Branch at Oak Ridge, Tennessee or to the Los Alamos Scientific Laboratories, New Mexico. Some of the laboratory equipment will be sent to the National Institute of Health, Bethesda, Maryland for use by Commander Andrews in continuing his work.

An estimate of about one week was given as the time requirement for closing out all supply shipment and logistics problems after arrival at Oakland, California.

Technical Measurements.

The roll-up operations for the Technical Measurements Unit (TU-7.6.6) were extremely simple in nature since little expensive equipment was

involved. All films and thermal radiation measuring devices were shipped to the United States by air. The LCM ("Lame Duck") which had become contaminated during test YOKE was surveyed and sunk along with the non-salvagable equipment which it contained. The test animal containers which were last used on Aomen Island were removed to the lagoon and sunk. Laboratory counting of the crater samples and other radioactive materials will be continued on the BAIROKO until just prior to arrival at the United States. Some of those samples which were sufficiently radioactive and of particular interest will be shipped to the National Institute of Health for the use of Commander Andrews in continuing his work. The slides from the cascade impactors will be taken by Lt. Commander Campbell to the Army Chemical Center, Edgewood, Maryland for measurement of particle size with an electron microscope under the direction of Mr. Lanier.

A large amount of data was obtained from the projects conducted by the Technical Measurements Unit, and only after much work will its true significance be recognized. Various project officers will continue with the writing of reports at their respective stations, and these reports will be submitted to the Scientific Director by 30 July 1948.

UNCLASSIFIED

Appendix A
To Operational Report
Phases A and B

HEADQUARTERS
TASK GROUP 7.6

LOGISTICAL DATA

8 Oct. 47: 10,000 bootees (made according to Oak Ridge special design) requested this date.

9 Oct. 47: 10,000 personnel film badges, 1,000 casualty film badges and two Ansco Densitometers requisitioned.

9 Oct. 47: Memorandum, DCC/3, requested procurement of the following materials:

a. 600 Army field caps
b. 4,000 cotton gloves
c. 500 pairs Army field shoes
d. 1,000 pairs cotton sox
e. 500 assault masks (M5-11-7)
f. 50 leak-proof masks complete w/hoods, face plates and M-11 cannisters
g. 6 pairs Navy 7X50 binoculars
h. 50 Navy wrist watches
i. 600 suits, Navy green, pants and shirts

10 Oct. 47: DCC/4 requested 5,000 neutral density goggles stored in AEC warehouse, Oakland, California, be set aside for this operation.

13 Oct. 47: Memorandum to Major DAUER (AEC), indicated some changes in the number of film badges to be procured by the AEC.

a. Personnel film badges with ranges 0-10r using type A and type K film should have a lead cross shield. It was noted that the Hanford plant was using a DuPont badge which had approximately this range.
b. In the casualty badges of high range it was requested that Cine positive 5202 be used in place of Kodalite 6567.

15 Oct. 47: Memorandum to Major DAUER (AEC) requested procurement of equipment, tools, instruments, etc., for the counting and repair laboratories. Primary materials were as follows:

[redacted]

UNCLASSIFIED

105

UNCLASSIFIED

ITEM	QUANTITY	UNIT PRICE
a. Scaling circuits, scale of 256, IDL Model 161	2	$305.00
b. Lead chambers for Eck and Krebs beta counter tubes	2	
c. Counting rate meters, General Radio 1500A	2	$500.00
d. Esterline-Angus, 5ma recorders	2	$500.00
e. Balance, capable of weighing 1 milligram w/magnetic dampening	1	
f. 5 inch cathode ray oscilloscope similar or equal to DuPont 208B	1	$285.00
g. Circuit analyzers, tube testers, etc.		
h. Tools, wire, friction tape, sponge rubber, bees-wax, spaghetti tube sleeving, etc.		

16 Oct. 47: Memorandum to J-4, DCC/7, Requested the following:

a. Stop-watch, 60 second sweep w/30 minute accumulative	4	$23.50
b. Stop-watch, 60 second sweep w/30 minute accumulative w/luminous dial	1	$25.00
c. Flashlight, 2 cell, water-proof	36	$ 2.00
d. Battle lanterns	6	$ 6.00

This memorandum further requested that the number of binoculars requested in the memorandum of 9 October be increased from 6 to 12.

17 Oct. 47: Memorandum to Major DAUER (AEC), DCC/9, requested the following items:

a. Filter queen w/spare filter paper	6
b. Nuclear track plates, 2" x 10", Eastman Kodak	120
c. Microscope, transmission type for odd powers (no oil emersion required	1

27 Oct. 47: Memorandum to Major DAUER (AEC) requested photographic materials to cover all film badge work.

30 Oct. 47: Memorandum to Major DAUER. DAUER objected to the AEC obtaining chemicals, glassware, solution, etc. as requested in DCC/10 so that request was modified as follows:

a. GE X-ray solution tanks, 10 gal. capacity	3
b. GE X-ray dental film hangers for 16 films	24

[redacted]

[redacted]

c. GE X-ray film drier, model D 1
d. Platform balance w/pans capable of weighing kgs., complete w/set of weights up to 500 gms.

30 Oct. 47: Memorandum for J-4, DCC/12, requested photographic chemicals, glassware, thermometers, clocks, buckets, etc., be obtained. In addition forty dozen 1-pint capacity wide mouth glass bottles with plastic screw tops were requested. These bottles would be used as specimen containers.

30 Oct. 47: Memorandum for J-4, DCC/13, requested 104 aiming posts be obtained from Army Ordnance stock. These posts requested by Major STONE to be used as reference points on the ZERO Island.

7 Nov. 47: Memorandum for Major DAUER (ASC), DCC/14, gave shipping information for the ASC materials being obtained for the Radiological Safety Group. All materials requested shipped to the U.S. Naval Shipyard, Terminal Island, Long Beach, California.

13 Nov. 47: Memorandum for J-4, DCC/17, requested the following items:

a. Range finder, M-9 w/tripod 2
b. Glasses, flying, sun, rose smoke (USAF) 80
c. Helmet, cloth covered (USMC) 40
d. Helmet, liners (USMC) 40
e. Boot, rubber, hip (USC) 144
f. Other misc. materials

19 Nov. 47: Memorandum for Major DAUER (ASC), DCC/18, approved the substitution of 2 Weston densitometers for the previously requested Ansco-Sweet densitometers. One of these instruments was later delivered to M. Comdr. Campbell for examination by Dr. Andrews as to its resolving power.

25 Nov. 47: Memorandum for J-4, DCC/19 mod 1, requested office desks, typewriter desks, chairs, and drafting stools for use in the instrument repair laboratory. Four 4-combination lock 4-drawer filing cabinets were requested for disposition as follows:

a. Air Department office 2
b. Squadron office 1
c. Instrument repair Laboratory 1

One Kardex filing cabinet, to hold at least 1,000 5" x 3" cards was ordered. Four typewriters were requested at this time and this number was increased to 8 on 8 February 1948. This memorandum also requested a great assortment of office supplies including among other things, a mimeograph machine.

[redacted]

26 Nov. 47: Memorandum for J-4, DCC/20. 19 October 47 memorandum covering clothing requirements for TG 7.6 was amended as follows:

	ITEM	FROM	TO
a.	Shoes, Army	600 pr	1,000 pr
b.	Gloves, Army	4,000 pr	6,000 pr
c.	Suits (Navy pants and shirt)	600 ea	1,000 ea

2 Dec. 47: Memorandum for J-4, DCC/22, requested 20 portable RBA gas masks.

8 Dec. 47: Memorandum for J-4, DCC/24, requested equipment and materials to cover the photographic work involved with nuclear track plates. In addition, 30 Army canvas field bags were requested.

8 Dec. 47: Memorandum for Major DAUER (AEC), DCC/26. This memorandum gave complete information on the microscope and accessories required for the work involving alpha plates.

8 Dec. 47: Memorandum for Major DAUER (AEC), DCC/27, requested the following items be procured from the Radiation Laboratories, Chicago, Illinois:

a.	Scott type mica window counter MK6 Model 1 complete w/lucite holder and 100 sample pans	2 assemblies
b.	MK5 Model 1, aluminum sample pans	100
c.	MK6 Model 2, pressure-seal type mica window counter w/window thickness approx. 2.5 mg per sq cm w/lucite holder and 100 sample pans	1 assembly

14 Dec. 47: Memorandum to J-4, DCC/33. It is requested that the following radium standards be procured from the Bureau of Ships:

a. 25 mg
b. 50 mg
c. 100 mg
d. 250 mg

All samples to be contained in 0.5 mm of platinum or equivalent.

16 Dec. 47: Memorandum to J-4, DCC/28, requested special shop work to manufacture the following items:

a.	Water sampler	25 assemblies
b.	Specimen holder	12 assemblies

Rough drawings of both items, along with one model water sampler, accompanied the memorandum.

5 Jan. 48: Memorandum for Major DAUER, DCC/34. As the result of technical measurements being conducted by the Chemical Corps, the following changes were made in the request of 15 October 47:

a. Increase the number of General Radio counting rate meters, type 1500A, from 2 to 4.
b. Increase the number of beta counting tubes and the number of gamma counting tubes for the above instrument from 3 to 6.
c. Increase the number of Esterline-Angus 5ma recorders from 2 to 4.

UNCLASSIFIED

[redacted]

This document consists of 52 pages. Copy [redacted] of 150 cys.

119

[redacted]

OPERATION PLAN NUMBER 1-48

COMMANDER TASK GROUP 7.6

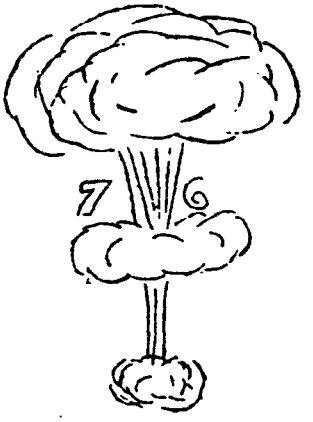

APPENDIX "B"

[redacted]

[redacted]

[redacted]

JOINT TASK FORCE SEVEN
TASK GROUP 7.6
(JOINT RADIOLOGICAL SAFETY GROUP)
USS PAIROKO (CVE-115)

6 March 1948.

OPERATION PLAN:
Comtaskforce 7.6 No. 1-48.

TASK ORGANIZATION

7.6 Joint Radiological Safety Group -- Commander F. I. WINANT, Jr.

A. 7.6.1 Air Monitor Unit -- Col. R. N. Isbell, Jr.
24 Air Force Officer Monitors.

B. 7.6.2 Staff Unit - - Lt.Col. E. B. Houghton
6 Officers
8 Enlisted

C. 7.6.3 Operations Unit -- Major W. W. Stone, Jr.
7 Officers.

D. 7.6.4 Laboratory Unit - - Cdr. H. L. Andrews
2 Officers
2 Civilians
8 Enlisted

E. 7.6.5 Radiological Records Unit - - Major J. T. Brennan
1 Officer
1 Civilian
1 Enlisted

F. 7.6.6 Technical Measurements Unit - Dr. R. Seeville, Jr.
5 Officers
2 Civilians
4 Enlisted

G. 7.6.7 Monitor Unit - - Cdr. D. H. Smith.
9 Army Officer Monitors
12 Navy Officer Monitors
1 PHS Officer Monitor
4 Army Enlisted Monitors

H. 7.6.8 Advisory Unit - - Dr. J. F. Nolan.
3 Civilians

I. 7.6.9 Rear Echelon - - Cdr. T. E. Fenick
1 Officer.

I. This Plan is derived from Commander Joint Task Force SEVEN Field Order No. 1.

II. This Joint Radiological Safety Group will support Operation "SANDSTONE" by effecting radiological safety of all personnel. In accomplishment of this mission, Commander Task Group 7.6 will:

A. Organize and command a Joint Radiological Safety Group composed of radiological safety monitors and supporting personnel.

B. Support all operations in radioactive areas by supplying radiological monitors and equipment.

C. Effect radiological safety regulations and report infractions thereof.

D. Detect and determine intensity and types of radioactivity encountered in all radiological areas.

E. Organize and supervise decontamination of personnel as necessary.

[redacted]

UNCLASSIFIED

[redacted]

JOINT TASK FORCE SEVEN
TASK GROUP 7.6
(JOINT RADIOLOGICAL SAFETY GROUP)
USS BAIROKO (CVE-115)

OPERATION PLAN:
ComTaskGrp 7.6
No. 1 - 48.

6 March 1948.

III. A. Air Monitor Unit will operate from Kwajalein Atoll in support of the mission of Commander Air Forces, JTF-7. This unit will receive support from TG 7.6 in matters of instrument repair, calibration, photometry, etc.

B. Staff Unit will provide administration for and services to the Task Group, including: Communications, Logistics, Historical Records, Photographic Liaison, Morale and Athletics.

C. Operations Unit will provide information to CJTF-7 and CTG 7.6 for planning radiological safety operations. It will maintain current information on location of all monitors and parties engaged in radiological operations. It will maintain current information on all radioactive areas. It will control operations of all radiological safety missions.

D. Laboratory Unit will perform all laboratory work required to support radiological safety operations including repair and calibration of instruments, development, reading and calibration of personnel film badges, measurement of decay rates of radioactive samples and determination of the extent of hazard from radioactive materials. It will prepare comparative records of instrument performance.

E. Radiological Records Unit will calculate exposure of all personnel who have entered radioactive areas and submit findings thereon. It will prepare all necessary reports concerning exposure and over-exposure and will prepare recommendations and reports for CTG 7.6 in conformity with Annex A. It will establish a medical review board to consider and comment on all findings of radiological over-exposure.

F. Technical Measurements Unit will supervise and coordinate and have responsibility for all technical measurements projects assigned to the cognizance of Task Group 7.6.

G. Monitor Unit will provide monitors and equipment for all radiological safety missions. It will effect personnel decontamination as necessary.

H. Advisory Unit will act in an advisory capacity to Task Force Radiological Safety Officer on medical and technical matters.

I. Rear Echelon will maintain liaison with supporting activities in continental United States.

IV. Monitor Services. Where required in connection with authorized missions, monitor services can be obtained upon request to the Radiological Operation Center on the BAIROKO. In the event that urgent work is involved in accordance with paragraph 4(d) of the Radiological Safety Plan, requests must be submitted via the Test Director. Units requiring monitor services will provide transportation where practicable. Attention is invited to paragraph 4(e) Radiological Safety Plan (Annex J to Field Order # 1).

[redacted]

UNCLASSIFIED

UNCLASSIFIED

JOINT TASK FORCE SEVEN
TASK GROUP 7.6
[redacted] (JOINT RADIOLOGICAL SAFETY GROUP)
USS BAIROKO (CVE-115)

6 March 1948

OPERATION PLAN:
ComTaskGrp 7.6
No. 1 - 48.

V. Radiological Medical Treatment. In the event that any man is injured under circumstances which indicate possibility of radiological contamination of the wound, Commander Task Group 7.6 should be notified immediately, in order that a radiological medical doctor may be made available.

FRANK I. RINAUDO, JR.
COMMANDER, U.S. NAVY,
COMMANDER TASK GROUP 7.6

ANNEXES:

A Radiological Safety Plan (This is a duplicate of Annex J to Field Order #1).
B Issue of Radiological Safety Equipment.
C Laboratory.
D Decontamination.
E Operations.
F Communications.
G Technical Measurements.
H Radiological Records.
I Personnel Assignments (TG 7.6 Special Orders #1 & #2).

DISTRIBUTION:

CJTF-7	10
CTG 7.1	5
Scientific Director	5
CTG 7.2	3
CTG 7.3	3
CTG 7.4	3
CTG 7.5	1
CTG 7.7	1
CO USS BAIROKO	2
TG 7.6 Files	25
Monitors (1 each)	82 (less Annex G)
	140

SECRET

UNCLASSIFIED

113

[redacted]

This document consists of 5 pages.
Copy 135 of 160 copies.

HEADQUARTERS JOINT TASK FORCE SEVEN

Washington 25, D. C.

3 February 1948

ANNEX J, TO FIELD ORDER NO. 1, 14 NOVEMBER 1947

RADIOLOGICAL SAFETY PLAN

1. Radiological Safety of all military and civilian personnel is a command responsibility.

2. The Radiological Safety Officer has staff responsibility for the radiological safety of all personnel, and in fulfillment of this mission he reports directly to the Task Force Commander. In the accomplishment of his mission he will:

a. Inform the Task Force Commander as to radiological hazards involved which may cause injury or sickness to personnel. A brief discussion of the hazards resulting from an atomic bomb explosion is included in Appendix 1. Safety precautions are contained in Appendix 2.

b. Advise Task Force Commander as to safe employment of personnel in radioactive areas.

c. Prepare instructions outlining the precautions necessary for protection of personnel against such hazards.

d. Re-evaluate the hazards of radioactive areas as radiological survey work progresses.

e. Advise Task Force Surgeon as to diagnosis and treatment of illness or injury resulting from or associated with exposure to radioactivity.

3. Task Group 7.6 is charged with effecting radiological safety of all personnel. In accomplishment of this mission Commander, Task Group 7.6, will:

a. Organize and command a Joint Radiological Safety Group composed of radiological safety monitors and supporting personnel.

b. Support all operations in radioactive areas by supplying radiological monitors and equipment.

c. Effect radiological safety regulations and report infractions thereof.

D-AG 1504

[redacted]

114

d. Detect and determine int[redacted]al types of radioactivity encountered in all radiological areas.

e. Organize and supervise decontamination of personnel as necessary.

4. Regulations. The following regulations will govern for the safety of all personnel entering areas containing radioactivity or working with radioactive materials:

a. All such persons shall, prior to departure from the United States, receive a complete physical examination including chest X-ray, blood count, and urinalysis; and reports of such examination shall be in the hands of the Radiological Safety Officer prior to departure. Prior to final release from the Task Force, personnel shall undergo such further physical examinations as the Radiological Safety Officer may specify.

b. The permissible radiological exposure is established at 0.1 roentgens per twenty-four (24) hours. Under unusual circumstances, the Scientific Director and the Radiological Safety Officer may authorize a total exposure up to three (3) roentgens, with the provision that such persons will be prohibited from further exposure for a period of thirty (30) days.

c. In the event that any person is found to have exceeded such total exposure, he shall be denied access to radioactive areas until specifically cleared by CJTF-7 on advice from the Radiological Safety Officer.

d. Work in contaminated areas is divided into two general classifications, namely, urgent work and routine work. Urgent work will be authorized by the Task Force Commander on request of the Test Director. This may be conducted during a period immediately following each shot. Upon accomplishment of the special missions required by this urgent work, further entry into contaminated areas will be discontinued until a comprehensive radiological survey has been accomplished. This will consist of a survey of both land and air. No routine work will be commenced until this survey indicates acceptable working conditions.

e. Names of all individuals who are expected to enter radioactive areas will be submitted to the Commander of Task Group 7.6 (Joint Radiological Safety Group) in the form of an eligibility list two weeks prior to the test. Commander Task Group 7.6 will prepar[redacted] cards on all such personnel. In addition, a Control List containing the names of any persons who expect to

enter a contaminated area on a specific day will be submitted to CTG 7.6 on the preceding evening. Commander Task Group 7.6 will report to the Task Force Commander with copies to Test Director and Scientific Director the names of any persons who are disqualified for such entry by reason of previous radiological exposure.

f. All individuals or parties entering contaminated areas shall be accompanied by monitors supplied by the Radiological Safety Group. Monitors will inform persons in charge of parties which they accompany of the radiological hazards involved and when radiation tolerance has been reached. Findings of the Radiological Monitor relative to radiological hazards must be accepted.

g. Prior to debarkation on a contaminated island, the monitor will check all personnel against the Control List. He will issue appropriate equipment. This special equipment will include film badges, dosimeters, and such protective clothing as may be required. In the case of urgent work parties, this equipment will also include gas masks for all personnel which will be worn if the monitor deems necessary. Upon completion of work in the contaminated zone, all persons will be required to surrender film badges and dosimeters to the monitors and will dispose of bootees and gloves prior to re-embarkation as directed. The monitor shall monitor clothing of all personnel and require contaminated personnel to disembark at the Radiological Safety Ship when conditions warrant.

h. No eating, drinking, or smoking is permitted in any radioactive areas until such area has been formally cleared by CJTF-7 and Test Director upon advise of the Radiological Safety Officer. Furthermore, no eating, drinking, or smoking by any person who has been in a radioactive area will be permitted until the radiological safety monitor has found that person to be uncontaminated.

i. Upon completion of work in radioactive areas, all dosimeters and film badges will be read and results recorded. A report of such results by the Commander of Task Group 7.6 to the Task Force Commander, with copies to Test Director and Scientific Director, will show names of all persons receiving radiation in excess of 0.1 roentgens on any day of operations and indicate thereon the total accumulated radiation [illegible] by such persons to date.

7.a

j. All islands in the Atoll will be considered contaminated until reported clear by the Radiological Safety Officer. Monitors will be stationed on ENIWETOK and PARRY IS to insure prompt clearance of these Islands.

k. Procedures for obtaining services of monitors will be issued as appropriate.

5. Air Stations. Appropriate radiological monitor units of Task Group 7.6 will be established at air stations which may be expected to handle radioactive materials or service contaminated aircraft. Such units will provide monitors to any manned aircraft which are destined to enter or closely approach radioactive areas. The unit leader will advise CTG 7.4 concerning radiological safety precautions. The Task Force Radiological Safety Officer will assist appropriate Task Group Commanders in preparing specific instructions for work of this nature.

6. Disaster Party. A disaster party will be formed from certain personnel of the Joint Radiological Safety Group. During periods specified by the Task Force Commander, this party shall be assembled near the zero site with the objective of assisting injured personnel in the event of disaster.

7. Radioactive Materials. Transportation of radioactive materials out of the test areas must be in accordance with Atomic Energy Commission Regulations for transportation of radioactive materials (AEC Regulations - Safety No. 3 - Standard Safety Requirements, Part 14). Prior to transportation, all such materials shall be monitored by representatives of Task Group 7.6. Authority to remove, out of the test area, samples of radioactive material which resulted from or were exposed to the detonation shall be obtained from the Test Director and shall comply with security requirements.

J. E. HULL
Lieutenant General, USA
Commanding

OFFICIAL:

J. DeF. BARKER
Brigadier General, USAF
J-3

2 Incls:
Appendix 1 -- Hazards Resulting from Atomic Bomb Explosions
Appendix 2 -- Safety Precautions

UNCLASSIFIED

[redacted]

DISTRIBUTION:

		Copy No.
Sec., JCS		1
C/S, U. S. Army		2
CNO		3
C/S, U. S. Air Force		4
CG, USAFAC		5
CinCPac		6
CG, 7th AF		7
Gen Hull		8
Gen Kepner		9
Adm Parsons		10
JTF Staff:	J-1	11
	J-2	12, 13
	J-3	14, 15, 16
	J-4	17, 18, 19
	Radiological Safety Officer	20
	Communications Officer	21, 22
	AG	23 thru 33 incl
AEC (through HLC)		34, 35, 36
TG 7.1		37
TG 7.2		38, 39
TG 7.3		40, 41, 42, 43
TG 7.4		44, 45, 46, 47
TG 7.5		48
TG 7.6		49
TG 7.7		50
Hq JTF (Fwd)		51 thru 60 incl
Radiological Safety Section		61 thru 160 incl

[redacted]

UNCLASSIFIED

[redacted] This document consists of 3 pages.
Copy [illegible] of 160 copies.

HEADQUARTERS JOINT TASK FORCE SEVEN

Washington 25, D. C.

APPENDIX 1 TO

ANNEX J, TO FIELD ORDER NO. 1, 14 NOVEMBER 1947

HAZARDS RESULTING FROM ATOMIC BOMB EXPLOSIONS

1. NATURE OF HAZARDS

a. When an atomic bomb explosion occurs, tremendous quantities of energy in a variety of forms are released. This energy is propagated outward in all directions.

b. When fission occurs, the immediate reaction is intense emission of ultra-violet visible and infra-red (heat) radiation, gamma rays, and neutrons. This is accompanied by the formation of a large ball of fire. The largest part of the energy from the explosion is emitted as a shock wave. The ball of fire produces a mushroom-shaped mass of hot gases, the top of which rises to about 10,000 feet in the first minute and about 30,000 feet in five minutes. In the trail below the mushroom cap is left a thin column. The cloud and column are then carried downwind, the direction and speed being determined by the direction and speed of the wind at the various levels of air from the surface to 50,000 feet altitude, where the top probably flattens out.

c. Casualties may be produced by blast, heat, light, ultra-violet radiation, gamma rays, neutrons, radioactive fission products which emit beta and gamma radiation, and unfissioned material which emits alpha particles.

d. The heat flash from the explosion will cause burns. Even thin clothing provides some protection against this form of flash burn. Wood is charred on the surface within one-half mile. Fires may be started.

e. The light is so intense that the retina of the eye may be seriously damaged by this influence alone. The skin may be "sunburned" by the ultra-violet radiation. Reflections from the water may intensify the heat and ultra-violet light radiation effects.

f. The blast is similar to that of most explosions but of much greater duration, intensity, and extent.

[redacted]

g. The emission of dangerous nuclear radiation can be separated into two time periods. The primary radiation which occurs at the time of the flash is composed of gamma rays and neutrons. This flash exposure is very short. Casualties may result from this primary radiation if the exposure occurs within 2500 yards of zero.

h. The neutrons may create a secondary or residual hazard by including radioactivity in certain elements within the range of approximately 1000 yards. As a result, objects in the area near the point of detonation may become radioactive and hazardous to personnel. Similarly, the salt water nearby may present a waterborne hazard.

i. Another and usually more important source of residual radioactivity is the radioactive fission products. These will be deposited on the ground near the point of detonation or they will be carried aloft in the bomb cloud. Most of these fission products in the cloud are carried to 20,000 to 50,000 feet, become greatly diluted, and are dispersed downwind. Gradually the particulate matter falls out. This "fall-out" of radioactive material may set up localized danger areas. It appears unlikely that there would be any significant hazard from this airborne contamination at a distance of more than 100 nautical miles from the center.

2. PROTECTION

a. Against the primary effects, distance will provide the best protection.

b. For the protection of the eyes against excessive light, special goggles are required for personnel within fifteen (15) nautical miles of the flash if looking at it. At this distance the light may be of such intensity as to be painful to the unprotected eye, producing an immediate temporary blinding, lasting for a half hour or more. It must be remembered that the sunlight will be much less than at Bikini, and therefore the pupil of the eye will be dilated, necessitating greater protection for the eyes. The heat of the flash is felt on the bare skin out to at least fifteen (15) miles.

c. Against the secondary radioactivity hazards from radioactive fission products, induced radioactivity, and unfissioned residue, detection and avoidance provide the best protection. This is the basis of the Radiological

Safety Plan. Suitable instruments indic[redacted] presence and intensity of radioactivity at a given place. Area reconnaissance, the maintenance of contamination situation maps, the posting of areas of hazard, and minimizing the spread of contaminated material into uncontaminated areas, constitute the active measures for reducing the radiological hazard.

3. ANTICIPATED HAZARDOUS AREAS

a. Immediately under the bomb burst there will be an area of dangerous radioactivity about five hundred (500) yards in radius. Some residual radioactivity will be observed at greater distances.

b. Near the point of detonation and downwind, an airborne radioactive hazard will exist. Its characteristics will depend on the meteorological influences such as wind speed and direction at various altitudes up to the maximum height reached by the cloud.

c. Contaminated water from the Lagoon will move in accordance with prevailing water currents. This will probably not offer any serious hazard but will require checking and may interfere with some operations.

d. All individuals or objects entering contaminated areas may transfer hazardous radioactivity to clean areas. Examples are the drones sampling the cloud and personnel entering contaminated areas to collect instruments.

e. By means of instruments, such as Geiger-Muller counters and ion chambers, it is possible to detect the areas of contamination and to measure the intensity of the radioactivity. Radiation intensity will be measured and reported in roentgens per twenty-four (24) hours. Besides these instruments, dosimeters and film badges will be used as indicators of the accumulated exposure to radioactivity. Personnel will wear film badges to provide a permanent record of the exposure.

f. The intensity of the radioactive hazard tends to decrease with time due to (1) decay of radioactive materials, and (2) dispersion, dilution, and transference from the immediate site. As an approximation the intensity of the radiation from the fission products decreases by radioactive decay inversely with the time after the detonation so that an area which had 15 roentgens per hour at one (1) hour after detonation would have an intensity of 7.5 roentgens at two (2) hours after detonation and 5.0 roentgens at three (3) hours.

[redacted]

121

UNCLASSIFIED

~~SECRET~~

This document consists of pages.
Copy No 135 of 160 copies.

HEADQUARTERS JOINT TASK FORCE SEVEN

Washington 25, D. C.

APPENDIX 2 TO

ANNEX J, TO FIELD ORDER NO. 1, 14 NOVEMBER 1947

SAFETY PRECAUTIONS

Section I - SAFETY OF PERSONNEL AT TIME OF DETONATION

1. GENERAL:

CJTF-7 will direct the operations in such a manner as will assure a maximum degree of safety to all personnel involved.

2. SHIPS:

No ships or personnel will be permitted closer than ten (10) nautical miles from Zero Island at the time of detonation. The bearings of the danger sector for ship operations will be established by CJTF-7 on the basis of the wind direction at the intended time of detonation. This danger sector will be designated as the Surface RADEX. All ships of the Task Force will be required to remain outside the Surface RADEX.

3. INDIVIDUALS:

a. Individuals on board ships of the Task Force will be protected collectively from the hazards of blast, heat and radioactivity by the operation of the ships.

b. No personnel will be allowed on any of the islands of Eniwetok Atoll except Eniwetok and Parry Islands at the time of detonation.

c. Individuals will be required to take action in the protection of their eyes at the time of the detonation. This fact will be made known to all individuals concerned by all Commanders.

d. All Commanding Officers shall observe the following regulations in regard to personnel who are not provided with goggles:

(1) At Zero hour minus five (5) minutes, commanders announce over the loud speaker system that all individuals will face away from the flash of the detonation. Commanding Officers shall clearly indicate direction in which to face.

~~SECRET~~

12

(2) Personnel will remain in this position until after the flash at which time they may "carry on." It is safe to view with the naked eye the incandescent column which follows the flash.

e. All Commanding Officers shall observe the following safety regulations in regard to personnel who are provided with approved goggles which are Navy All Purpose, 4.5 neutral density filter replacement. TG 7.6 will provide goggles.

(1) All Commanding Officers at minus two (2) minutes will direct all individuals to adjust their goggles.

(2) Those with approved goggles may look directly at the flash.

(3) The flash may be taken as the signal to remove the eye protection.

Section II - SAFETY OF PLANES AND AIRBORNE PERSONNEL

1. All planes in the air operation at Zero hour will carry a RADSAFE monitor.

2. At Zero hour no manned aircraft will be within twelve (12) nautical miles radius of the target. The Danger Sector for Air Operations will be designated as the Air Radex and will be announced by CJTF-7. All planes will operate outside the Air Radex.

3. No planes will approach closer than four (4) nautical miles to the rising column or the visible cloud.

4. Personnel from Radiological Safety Section will be assigned to TG 7.4 in time to provide required briefing and indoctrination of personnel for these specific operations, and to provide technical advice and monitoring services essential to safe conduct of the operation. TG 7.6 will be responsible for furnishing goggles and necessary radiation detection equipment.

5. "Drones" will be considered as being contaminated until proved otherwise by the monitor specifically assigned to the drone landing site. He will advise the local commander as to the necessity for posting sentries, delineating areas of hazard, and such other actions as are required to protect personnel locally. Ground crews and personnel working on the drones which have been exposed will wear "personnel" badges as provided by, and in accordance with the instructions of, the monitor assigned to the landing site.

6. When the monitor of any plane finds that the radioactivity is of an intensity such that an exposure of greater than 0.1 roentgens will be obtained during the mission, he will immediately advise the pilot and immediate evasive action will be taken to put the area of contamination directly on his stern as quickly as possible.

7. Protection of Eyes at Zero Hour.

a. General purpose goggles fitted with ND 4.5 filter replacements will be provided all personnel airborne at Zero Hour. Senior radiological monitor attached to air operation units will see to it that they are available and will check to see that all personnel airborne at this time are so equipped before taking to the air. He will also see to it that they have had previous instructions in the proper use of the goggles and in eye protection.

b. At minus two (2) minutes all personnel will adjust the special goggles. (Note exception as to co-pilots in paragraph c, below).

c. Co-pilots will take extra precautions to ensure greater safety. They will attempt to protect eyes completely. Co-pilot will have goggles adjusted by minus two (2) minutes and will cover his eyes with bended arms until after the flash. This will permit co-pilot to take over in case the pilot is temporarily blinded.

Section III - SAFETY OF PERSONNEL SUBJECTED TO RADIOACTIVE RAIN OR FALL-OUT.

1. If personnel are unavoidably in an area on which radioactive material from the cloud falls, those personnel should observe certain safety precautions. They should immediately take cover in as air tight a location as is available. Upon the advice of the senior monitor present, gas masks will be worn. Any persons actually contaminated by radioactive rain should remove their clothing and wash themselves off as rapidly as feasible. No eating, drinking, or smoking is allowed as long as rain continues and until decontamination is completed. The following recommendations are made for certain specific locations:

a. Eniwetok and Parry Islands - All personnel take cover in buildings previously selected by the monitor and remain there until danger from rain is ended. The monitor will then check the area surrounding the shelter to deter-

mine if it is safe to resume normal operations in the open.

b. Downwind Destroyers - If the downwind destroyers become involved in a radioactive rain storm, all personnel should be sent below decks and all hatches closed. The ship should then follow a course which is predicted to take it out of the rain area as rapidly as possible. The Radiological Safety Control Unit on the AGC-7 will be prepared to offer services in this respect. As soon as the rain has ceased, the monitor will check the exposed surfaces and recommend hosing down to remove contaminated areas if necessary.

c. Ujelang - Upon warning from CJTF-7 that Ujelang lies in a danger zone, the personnel will board the LST in preparation for possible evacuation. If subjected to radioactive rain or upon receipt of orders from CJTF-7, the LST will put to sea. If subjected to radioactive rain, personnel will all go below and all hatches will be closed. When the rain has ceased, the monitor will check the exposed surfaces and recommend such decontamination procedures as appear necessary.

d. Other ships of the Task Force - Upon receipt of warning of danger of radioactive rain, all personnel will be sent below and hatches closed. Ships will take such courses as are prescribed by CJTF-7 in order to remove them from the danger area as rapidly as possible. Personnel will remain below until danger is pronounced ended by CJTF-7. Monitors will be dispatched to all ships subjected to rain as rapidly as possible to check the topside condition.

UNCLASSIFIED

[redacted]

TASK GROUP 7.6
JOINT TASK FORCE SEVEN

ISSUE OF RADIOLOGICAL SAFETY EQUIPMENT

ANNEX B TO TASK FORCE 7.6 OPERATION PLAN 1-48.

I. Radiological Safety equipment will be issued in accordance with the provisions of the following paragraphs.

II. GOGGLES. In accordance with paragraph 3, Section 1, Appendix 2 to Annex J of Field Order, Number I, Commander Task Group 7.6 is prepared to issue neutral density 4.5 protective goggles to task group logistic representatives during the period 20 to 30 March. These allocations are for appropriate distribution within the Task Groups and are to include VIP's assigned to these groups. The supply of goggles is limited and will not be adequate to provide for all personnel of the Task Force. Task Group and Unit Commanders should insure that goggles are distributed to all personnel whose duties require same. Other personnel will be governed by provisions of paragraph 3(d), Section I, Appendix 2, Annex J of Field Order Number 1. Distribution will be made as follows:

CJTF 7.	300
CTG 7.1	300
CTG 7.2	1000
CTG 7.3	1600
CTG 7.4	300

III. Goggles in excess of requirments should be returned promptly to CTG 7.6 on BAIROKO. Goggles are not expendable and must be returned to CTG 7.6 after final test.

IV. Clothing and Equipment for personnel other than monitors engaged in missions in radioactive areas. The following sections of Annex J to Field Order No. 1 are quoted.

V. A. Paragraph 4,g; "This special equipment will include film badges, dosimeters and such protective clothing as may be required."

B. Paragraph 4,c; "Names of all individuals who are expected to enter radioactive areas will be submitted to Commander, Joint Task Group 7.6 in the form of an eligibility list two weeks prior to the test."

Logistic representatives from Task Groups will be issued clothing for personnel listed in accordance with sub-paragraph (B), during period 20 - 30 March. Clothing will be obtained from Task Group 7.6, (LCDR D. C. CAMPBELL) on the BAIROKO as follows:

Army Field Shoes	-	1 Pair
Sox	-	2 Pair
Shirt & Trousers (Navy Green)	-	1 Suit
Baseball Cap	-	1 Each
Cloth Bootees (Shoe Covers)	-	3 Pair
Cotton Gloves	-	1 Pair

VI. All personnel will be examined by TG 7.6 monitors on leaving contaminated areas and contaminated clothing will be disposed of by TG 7.6 and a re-issue will be made.

[redacted]

DIRECT [illegible]

Clothing and Equipment (continued)

VII. It is anticipated that a cache of material consisting of shirts, trousers, rubber boots, bootees and gloves will be established on the Zero Island and used as replacement clothing. This cache will also contain soap, water and gas masks. This cache will be replenished as necessary.

VIII. For the Issue of Instruments, Film Badges, etc. to monitors a section of the hanger deck of the U.S.S. BAIROKO will be designated. Monitors will present themselves at the issue desk with two copies of the "Monitors Data Sheet" giving names of all members of the monitors party and the general type of survey instruments desired. The issue section will assign film badges, dosimeters and survey instruments and the information on the type and number of the instruments will be recorded on both cards. One card will remain with the issue section and the other will accompany the monitor.

IX. Immediately upon completion of a mission the monitor will return all instruments, dosimeters, film badges, etc. to the issue section along with complete information of performance, etc. The issue section will turn all records, film badges, instruments, information, etc. over to interested parties in TG 7.6.

X. Specific allocations follow:

A. Each Air Group Monitor will be furnished:

1 Ion chamber survey instrument.
1 G.M. counter.
1/2 Protexirmeter.
1 Dosimeter, 0.2R.
1/2 High range dosimeter (10R or 50R).
1 Casualty badge.

In addition 1 personnel film badge will be furnished for each plane crew member. Instruments will be delivered to Kwajalein as soon as storage facilities are available. These instruments will be used for training and will be exchanged for new equipment three days prior to the first test. Film badges along with dosimeter readings will be returned by air to the BAIROKO each day. Faulty instruments will be immediatly returned to the BAIROKO fo replacement. All instruments with the exception of those needed for monitoring aircraft and equipment along with complete performance data will be returned to the BAIROKO on Zero plus 2 day. A new group of instruments will be issued 3 days prior to the next shot.

B. The Disaster Group will be equipped per man as follows:

1 Casualty badge.
1 Personnel Badge.
1 Dosimeter 0.2R.
1 Dosimeter 10R.
1 Dosimeter 50R.
Hood gas mask.
1 High range ion chamber survey meter.
1 Alpha Meter.

C. The Zero Day Ashore Groups will be equipped:

1. Personnel film badges: 2 per monitor and 1 per party member.

2. 0.2R Dosimeter: 2 per monitor and 1 per party member.

C. (Continued)

3. 10R Dosimeter: 1 per monitor and 1 per party member for each "urgent work" mission.

4. Casualty Badge: 1 per monitor and 1 per party member for each "urgent work" mission.

D. Eniwetok, Parry and Viclang Islands will have the following issued to each monitor.

1 G. M. counter.
1 Ion chamber survey instrument.
1 Dosimeter 0.2R.

All personnel on Eniwetok and Parry Islands will be equipped with personnel film badges.

E. Monitors carry two 0.2R dosimeters and one personnel film badge and Party Members will each carry one 0.2R dosimeter and one personnel film badge when entering possibly contaminated areas. Aside from the first day operation the survey instrument range will be specified by the Operations Unit. Spare instruments will be issued to meet operational requirements.

F. Where personnel of TG 7.1 have been designated as "special monitors" these personnel will obtain instruments from CTG 7.6 on BAIROKO. Such instruments will be promptly returned to CTG 7.6.

XI. For Beach Communication one SCR-300 (Walkie Talkie) will be issued to monitors when required by their mission.

XII. One beach announcing system will be placed in the clothing cache on the Zero Island. Two systems will accompany the first boat to the Zero Island, one to go ashore, the other remains with the boat.

XIII. Dust Collectors will be installed on the BAIROKO, MT. MCKINLEY, ALMMALE, CURTISS and one responsible person on each ship will be instructed in the operation of this equipment. A dust collector will be used ashore on the Zero Island.

12

UNCLASSIFIED

HEADQUARTERS
TASK GROUP 7.6
JOINT TASK FORCE SEVEN

ANNEX (C) TO TASK GROUP 7.6 OPERATION PLAN 1-48

I. LABORATORY

A. Mission.

1. Unit 7.6.4 is responsible for the maintainence of an adequate stock of health survey instruments, and for the repair, servicing, and calibration of these instruments.

2. This unit is responsible for an evaluation of various types of health survey instruments.

3. This unit is responsible for the processing of and measurements on photographic film badges for personnel monitoring.

4. The laboratory facilities of the unit are available for measurements in connection with the activities of Task Unit 7.6.6.

B. Operations.

1. Unit 7.6.4 will maintain a stock of calibrated ionization chamber and G-M counter survey instruments, and pocket dosimeters in the after ready room, U.S.S. BAIROKO. These instruments will be issued upon recommendation of the Operations Officer from an issue area on the hanger deck, U.S.S. BAIROKO, and will be returned to the issue area after use.

2. Photographic film badges, sufficient for each party will be issued to each monitor at the time of the instrument issue.

3. All instruments returned will be checked for contamination, operation, and calibration before being returned to stock.

4. A record will be kept of the time each instrument was in operation so that battery replacements can be anticipated.

5. Photographic film badges returned to the issue area will be processed, measured, and the results recorded on forms supplied by the Radiological Records Unit.

6. Pocket dosimeters returned to the issue area will be read and the exposures recorded on forms supplied by the Radiological Records Unit.

7. Accurate records will be kept on the repairs and replacements required by each survey instrument.

8. A series of tests will be run on the various types to determine good and bad design features. A list of the objectives of these tests are as follows:

SECRET

I. LABORATORY (Continued)

a. To determine the relative reliability of the various instruments.

b. To determine the useful operating lifetime.

c. To determine the directional response to radiation.

d. To determine resistance to shock.

e. To determine the effects of moisture on meter operation.

f. To determine the effect of altitude on meter operation.

g. To determine the leakage rate of pocket dosimeters.

9. At the conclusion of monitoring operations a questionaire will be submitted to each monitor to obtain data on the outstanding features of the various instruments.

10. Beta decay and gamma decay curves will be run on crater samples furnished by Task Group 7.1 as soon as possible after detonation.

11. Absorption measurements will be made on the crater samples at intervals during the decay.

12. Beta and gamma activities will be determined on pertinent samples of material submitted for test by the various operating units. All samples shall be brought to the instrument issue area and in no case will they be brought directly to the laboratory.

UNCLASSIFIED [redacted]

HEADQUARTERS
TASK GROUP 7.6
JOINT TASK FORCE SEVEN

ANNEX (D) TO TASK GROUP 7.6 OPERATION PLAN NO. 1-48

PERSONNEL DECONTAMINATION

I. Personnel decontamination on ZERO Island will be as follows:

Upon completion of each mission all personnel will return to the Beach Radiological Safety Center where they will discard cloth bootees and gloves. These will be placed in appropriate containers and will later be weighted and dumped overboard at sea in deep water. Personnel who may have removed gloves while in the radioactive area will be required to wash their hands. The monitor will then check all persons in his party to insure that they are clear. In the event that any personnel are found to be contaminated they will discard all clothing so contaminated and when monitored and clear will be issued fresh clothing from the Beach Radiological Safety Center. All clothing discarded in this procedure will be destroyed as indicated above and no attempt will be made to launder contaminated clothing. In the event this procedure fails to insure complete decontamination of all personnel, such personnel will be escorted by the monitor to the CVE for a re-check and such additional decontamination measures as are necessary to insure complete clearance.

II. Personnel decontamination in areas other than ZERO Island will be as follows:

Monitors shall check personnel to insure that they are decontaminated at the completion of all radiological missions and where personnel are found to be contaminated, procedures similar to those indicated in paragraph 1 will be followed. In the event of contamination by rain-out or fall-out on inhabited islands such as Parry, Eniwetok or Ujelang, the monitor will promptly report the circumstances by radio to Commander, Joint Task Force SEVEN and Commander Task Group 7.6. Under such circumstances procedures as set forth in Section 3, Appendix 2 of Annex J to Field Order #1 will be followed. Walking in contaminated areas and handling of contaminated materials under such circumstances should be held to a minimum.

[redacted]

UNCLASSIFIED

[redacted]

HEADQUARTERS
TASK GROUP 7.6
U.S.S. BAIROKO (CVE-115)

OPERATIONS

ANNEX E TO TASK GROUP 7.6 OPERATION PLAN

I COMPOSITION.

Operations Officer . . . . . Major Stone

A. RadSafe Center (Located in U.S.S. MT MCKINLEY (AGC-7).

Dr. Scoville (In Charge)
Capt. Kimbol (Asst-in-Charge)
Two officers

B. Radops (Located in U.S.S. BAIROKO (CVE-115).

Major Shopherd (In Charge)
Two officers

C. Beach Radsafe Center (Located on Zero Island).

One officer

II GENERAL DUTIES.

A. Radsafe Center.

This Center will maintain radiological situation maps. It will plot the radiological safety situation for the information of CJTF-7 and his staff. It will receive and list all the radiological information sent in by monitors and reconnaissance units. Danger areas for both aircraft and surface operations will be delineated. Provides information, on request, for evacuation of Ujelang; opening of air and sea lanes and safety of islands. After zero day Air Operations will supply any needed information concerning cloud travel.

B. Radops.

The CVE Radiological Operations Center will duplicate all plots and status boards maintained in the AGC-7 Radiological Safety Center. In addition, it will control such reconnaissance units as are required in order to obtain the necessary information for its

S[redacted]

UNCLASSIFIED

132

charts. It will provide information to Commander, Task Group 7.6 for planning radiological safety operations and will maintain current information on location of all monitors engaged in operations. It will maintain a detailed lagoon chart with status of radiological safety clearance of all islands and water areas. It will maintain an operations table giving details on all missions into contaminated areas scheduled for each day, including name of monitor, radiological clearance on party members, destination, general type of mission and time in and out. It will brief all monitors prior to departure. It will act as the receiving center for all incoming requests for monitors. It will issue necessary instructions to the monitor unit concerning monitor requirements and duties. It will receive operational reports from monitors and plot radiological information from same.

C. Lead. Radsafe Center.

This Center will be established on Zero Island on plus 1 day. It will be equipped with radio and battery powered loud speakers. It will insure that all parties entering Zero Island are accompanied by radiological monitors and will relay information and requests on the radiological network. It will be located near the landing point in an uncontaminated area. It will receive contaminated clothing from personnel upon departure from the island. Serves as communication and information center. It will be prepared to replace contaminated clothing and furnish masks as required. Provides limited washing facilities.

III OPERATIONS ON ZERO DAY.

	MONITOR REQUIREMENTS Totals
A. Air Operations.	25

Task Unit 7.6.1 will report to CTG 7.4 on Kwajalein Atoll and operate in support of the mission of Commander Air Forces JTF 7. Monitors will train and rehearse at Kwajalein commencing about 18 March 1948. Monitor requirements for Air Operations are summarized below:

[redacted]

ANNEX E

1. MONITOR REQUIREMENTS

	Totals
1. Drone mother aircraft (12 B-17's). One monitor aboard each mother plane to furnish radiological information for safe conduct of mission.	
2. Photo aircraft (2 F-13's and 2 C-54's).	
3. Air Command Aircraft (1 B-17).	
4. Spotter aircraft (1 B-17).	1
5. WIP aircraft (1 C-54).	
6. Air rescue aircraft (2 OA-10A's).	2
7. Cloud chaser aircraft (3 B-29's).	4
8. Radiological survey aircraft (1 C-47 or C-54).	1
B. Eniwetok Monitor Party.	4

1. Monitor removal of filters from 8 drone planes and transfer of filters to 2 waiting planes for courier flight to U.S. L.J-2 will furnish a special monitor to accompany each of the courier planes to Los Alamos.

2. Monitor removal of film badges placed aboard drones by TG 7.6. This may be postponed until the radiation level is such the 0.1 r dose will not be exceeded. This will be accomplished by a TG 7.6 monitor at Eniwetok.

3. Monitor removal of accelerometer data from drone planes.

[redacted]

ANNEX E

MONITOR REQUIREMENTS
Totals

4. Clear drones planes for manned flight to Kwajalein. 0.1 r or less is the maximum dose which will be obtained by the drone plane crews in this flight. It may be necessary to postpone this operation until the second or third day after the shot. Air monitors will be flown in from Kwajalein to accompany the drones.

5. Monitor Eniwetok Island for safety. If rainout or contamination occurs monitors will take action to insure safety of all personnel on Eniwetok. Details of action are given in Section III, Appendix 2, Annex J of F.O. #1.

6. After the first day, 2 of the 4 monitors will return to the CVE.

C. Disaster Party. 2

1. About 0600, X minus 1 day, 4 AV-4 men and 2 TG 7.6 medical monitors with green badges will go ashore to the Zero Island.

2. On reaching Zero Island, the 2 monitors will go to the tank revetment and remain there. A suitable conveyance will be at the revetment for use.

3. Suitable monitoring, protective and first aid equipment will be in readiness.

4. At 1200, X minus 1 day, the two monitors will be evacuated from the Zero Island to the CVE-115 by a boat from the AV-4.

D. Parry Island Monitor. 1

One TG 7.6 red badge monitor will be placed on Parry Island about 1000, X minus 1 day. He will give warning and advise action in the event of rainout of radioactive material on Parry Island and will conduct survey for clearance of island. He will be returned to the CVE about 1600, X day.

E. AVR (#1) Party, TG 7.1 Recovery Party. 5

1. Monitor LAJ-3 operation of removing neutron samples from the land cable. One monitor will remain near the winch and check the sample removal as the cable is wound in. The second monitor will serve as a standby as the radiation from the cable is expected to be high.

[redacted]

UNCLASSIFIED

Total

2. Monitor LAJ-4 operation of recovery data on gamma and neutron multiplication (both methods 1 and 2) from the timing station.

3. Monitor removal of LAJ-5 data on gamma spectrum and intensity versus time from gamma station B and also from gamma station A provided the exposure obtained in the operation does not exceed 0.1 r. Gamma station A is the closest point to the crater which it is hoped to approach.

4. Monitor to remain on the AVR while the recovery party and other monitors are ashore. The AVR has an additional mission as an air/sea rescue boat and may be called upon at any time to perform that function. This monitor will be on board for such an operation.

5. The five monitors for the AVR(#1) are delivered to the AVR about 1000, X minus 1 day and will be returned to the CVE about 1400 X day.

F. AVR (#2) - Air/Sea Rescue Boat. 1

One TG 7.6 monitor will be on board the AVR (#2) to assist in the air/sea rescue operations which may be necessary in contaminated areas. This monitor will be delivered to the AVR(#2) about 1000 X minus 1 day and will be returned to the CVE-115 upon completion of air/sea rescue operations on X day.

G. LCM Radiochemistry Party. 2

1. Monitor for Tank #1 operations goes ashore in small boat with LAJ-2 men to revetment; after checking area he goes in toward crater with one LAJ-2 man (Bowman) in jeep until 100 mr/hr. is reached. A flag is placed at that point and the tank guiding helicopter is to operate between the flag and the revetment only.

2. If Tank #1 is inoperable, the LCM proceeds down the beach to a landing point and there attempts to land the spare tank. A second monitor is on board the LCM to monitor the landing of the second tank.

3. About 1200, X minus 1 day, these two monitors are placed on board the LCM just prior to its departure from the Zero Island for Eniwetok Island. The two monitors will be returned to the CVE about 1200, X plus 2 day from Eniwetok.

Totals

H. Helicopter [illegible]k Guiding.

1. Two tank [illegible]ding aircraft (one being spare) w[illegible] have a pilot and a tank operator [illegible]oard. The tank operator (from TG 7.1) will be specially designated as a monitor. These aircraft will at all times operate over areas where the ground intensity is less than 100 mr/hr.

I. Helicopter Recovery Parties. 1

1. Soon after the detonation three helicopters take off from the CVE for the tank revetment on the Zero Island. One TG 7.6 monitor will be on board the first helicopter to land on the island. This monitor will clear the landing of the helicopters and will assist in monitoring the land cable operation (works with the AVR monitors after arrival at Zero Island).

2. This monitor will also accompany the part of the crater sample which is to be returned to the CVE by helicopter or small boat.

J. Technical Photography Recovery and Aoman Survey. 2

1. About 1200, X minus 2 day, two TG 7.6 monitors will be placed on Eniwetok. Soon after the shot, these monitors will embark on a boat from the boat pool with the photographic recovery party.

2. One monitor will serve for the film recovery from the lagoon and the Aoman Towers.

3. The second monitor will survey Aoman Island while the film is being recovered. This survey will clear Aoman in order that parties from the AV-4 may go to work on Aoman as soon as possible. A jeep will be left available on Aoman for this survey.

K. AV-5 Monitor. 1

1. One TG 7.6 monitor will be on board the AV-5 to monitor the reception of radioactive materials from the Zero Island.

2. The TG 7.6 monitor will work only on topside of the AV-5. It is assumed that TG 7.1 will be responsible for radiological safety within the AV-5, using AEC safety personnel.

MONITOR REQUIREMENTS
Totals

L. Ujelang Evacuation Party. 1

1. One TG 7.6 monitor will be placed aboard the LST designated as the ship which will be at Ujelang.

2. He will furnish to the Commanding Officer of the LST radiological data to be forwarded to CJTF-7.

3. He will advise the Commanding Officer of the action to be taken if a fallout of radioactive material occurs on Ujelang.

M. CVE Monitor. 1

1. One member of the Laboratory Unit (7.6.3) will act as a monitor for the reception and handling of radioactive samples and contaminated materials.

N. Destroyer Monitors. 3

1. One TG 7.6 monitor will be placed aboard each of the three destroyers.

2. These monitors will be responsible for furnishing the Commanding Officers of the destroyers with advice concerning radiological safety and such precautions as may be necessary.

O. Lagoon Reentry Patrol. 2

1. The CVE, being the first ship to reenter the lagoon will put overside two radio-equipped boats. These boats will each contain a monitor and will proceed the task force to the anchorage area.

2. The patrol will search the anchorage area for radioactive water. CJTF-7 will be kept informed of the readings.

3. After completing this mission the patrol will monitor the water on the lagoon side of the zero island and furnish information concerning contaminated water.

IV RADSAFE MONITORING ON PLUS 1 DAY.

A. MISSION.

Radsafe Monitors will survey the islands of Eniwetok Atoll and Ujelang for the purpose of providing accurate information as to the extent of contamination of the terrain.

[redacted]

B. PERSONNEL.

Monitors are assigned to survey work as follows:

2 Monitors	Eniwetok Island (See para. III B 6).
1 "	Ujelang Island (See Para. III L).
12 "	To Survey Zero Island
4 "	To Survey Islands adjacent to Zero Island.

C. OPERATION

Two groups of two Monitors each will Monitor Muti, Bejen and Runit Islands and other Islands adjacent to Zero Island. Each group will carry radio equipment.

Four Groups of three monitors each will monitor Zero Island.

All buildings and other construction on the Island, including special AFC construction, will be marked to assist in orientations and preparations of radio messages to Radops. Where construction and other terrain features do not permit adequate orientations a system of marked stakes will be installed.

All monitoring groups will be issued appropriate maps for the accomplishment of their mission and will have adequate facilities for radio communication.

V MONITOR REQUIREMENTS FOR XRAY 2 DAY AND LATER.

A. Monitor requirements for service tests not under Joint Task Group-7.6.

1. Bu V and D to expose structures and instruments, taking photographs of structures both before and after explosion. "After" photographs to be taken from xray plus 2 to xray plus 10. One monitor per day.

2. OCE to expose structures, instruments, and certain equipment, taking photographs both before and after explosion. "After" photographs to be taken from xray plus 2 to xray plus 11. One monitor per day.

3. Additional monitors to be furnished if required.

B. Monitor Requirements for Service Tests under JTG-7.6.

1. JTG-7.6 to collect film badges, neutron detectors, etc., from xray plus 2 to xray plus 8. Three monitors per day.

2. JTG-7.6 to collect cascade impactors and collective protectors on xray plus 2, xray plus 4, and xray plus 11. One monitor per day.

3. JTG-7.6 to inspect animal containers: Water container on xray plus 4, and land container on xray plus 5. One monitor per day.

4. Additional monitors to be furnished if required.

C. Monitor Requirements for Scientific Measurements under TG-7.1.

1. Small boat from LSM to effect water cable recovery on xray plus 2. One monitor.

2. Data at gamma station A to be recovered in event this operation was delayed. One monitor.

D. Monitor Requirements for Clearing Islands.

1. All islands of Eniwetok Atoll not cleared before xray plus 2 to be cleared on xray plus 2 or later. All monitors available.

VI RADIOLOGICAL SITUATION PLOTS.

A. Operation.

1. Flag plot will be maintained only for zero days unless otherwise directed by RadSafe Officer JTF-7. Located on the Flag Bridge, AGC-7, this plot will furnish desired information to CJTF-7 and RadSafe Officer JTF-7. Data will be recorded on overall chart of atoll and on detailed maps of island concerned in the test. Current Air and Surface Radex information will be available at Flag Plot.

2. RadSafe Center on AGC-7 will be maintained in the Joint Operations Room. It will furnish systematic information to Flag Plot and to CJTF-7 and RadSafe Officer JTF-7 as requested. The situation will be recorded on overall map of the atoll and on detailed maps of the zero islands concerned, based on data sent in by monitors with scientific parties or on survey missions. On zero days direct communications will be received from monitors. On zero plus one and following days RadSafe Center will copy all reports to Radops on CVE-115. Communications between Flag Plot and RadSafe Center will be by:

(a) Telephone

(b) Teletype

(c) Tube

RadSafe Center can be reached from the Flag Plot by Captain's Command System and Flag Command System also. The radsafe Center will remain in operation until directed to close by RadSafe JTF-7 or CTG-7.6.

3. Radops will maintain a situation plot aboard CVE-115. Data will be supplied by monitoring reports to RadSafe Center on zero days, and by direct communications with monitors on zero plus one and succeding days. This plot will furnish information to CTG 7.6 and his operations officer and will provide basis for briefing of monitors for their respective missions. Radops will maintain contact with monitors in the field as far as possible and will order and brief monitoring parties on and off CVE-115. Radops will maintain plot until directed otherwise by CJTG 7.6.

B. Air - Surface Radex.

1. Air and Surface Radex reports will be rendered routinely or upon request prior to each test from the RadSafe Center aboard the AGC-7. After each test changes in Air and Surface Radex will be rendered whenever warranted by weather changes.

UNCLASSIFIED

[redacted]

HEADQUARTERS
TASK GROUP 7.6
JOINT TASK FORCE SEVEN

ANNEX (F) TO TASK GROUP 7.6 OPERATION PLAN NO. 1-48

I. Communications for Task Group 7.6 will be as prescribed in ANNEX F to F.O. No. 1, Headquarters JTF-7, dated 14 November 1947 and in accordance with USF 70(B) corrected through Change No. 2.

II. General Instructions

A. Radio silence must be maintained as ordered by higher authority.

B. Radio communication within this group will be largely by voice radio circuits. It is therefore incumbent that a high degree of circuit discipline be excercised by Net Control Stations to insure orderly and rapid transmission. All operating personnel will be instructed in circuit discipline and correct transmission procedure.

C. Emergency warnings may originate on one or more of the following frequencies: 3, 4.475, 34.8, 65.74, or 140.58 megacycles. Commanders will insure that emergency warnings are relayed as necessary to those for whom they are responsible. Anyone wishing to clear the circuit for emergency warnings will say "Urgent, Urgent, Urgent" and then give the message. When these words are heard, all existing traffic will cease on this circuit, giving the originator a clear circuit. Likewise, if a plane is going to crash, the pilot or an observer seeing the plane crash will send a "Crash, Crash, Crash" followed by a message giving the location of the crash. Such crash messages should be sent on 4.475 Mc. (Voice) or 140.58 Mc. (Voice) to the Air-Sea Rescue Unit.

D. Radio silence, when imposed, will not be broken except on order of the Task Group Commander transmitted through Net Control Stations, except in an emergency. Breaking of radio silence due to an emergency will not authorize a general breaking of radio silence. Stations not involved in the emergency transmission will maintain silence and listen only.

E. All radio transmitters will be calibrated by 15 March 1948 in accordance with procedures outlined in Articles 944 and 945 of USF 70(B).

F. Only messages essential to the operation will be transmitted. Net Control Stations will supervise nets to prevent unnecessary transmissions.

G. All operators will "listen through" to make certain the circuit is clear before beginning transmission.

III. RadSafe Radio Reporting Net. The RadSafe Radio Reporting Net will be established on a date and time to be announced later at the direction of CJTF-7. See Tab 1 to this Annex for channel numbers, frequencies and circuit descriptions of the RadSafe Radio Reporting Net. See also Tab 2 of this Annex for circuit diagram of the net.

IV. Voice Radio Call Signs. See Tab 3 of this Annex for voice radio call signs to be used in and by the RadSafe Radio Reporting Net.

[redacted]

UNCLASSIFIED

[redacted]

HEADQUARTERS
TASK GROUP 7.6
U.S.S. BAIROKO (CVE-115)

TAB 1 to ANNEX F
OP-PLAN, COMTASKGROUP 7.6 NO. 1-48

RADSAFE RADIO REPORTING NET

CHANNEL	FREQ. IN MCS	FUNCTION AND REMARKS
509H	146.16	Neutron Net - Helicopters Listening Only
513A	3.095	AirRadTracking (Primary) Listening Only
513B	3.485	AirRadTracking (Secondary)) Listening Only
715	30.0	Boat Pool Net - Listening Only
716A	27.3	Technical Net - Listening Only
716B	29.4	" " " "
716C	29.5	" " " "
716D	29.6	" " " "
716E	29.7	" " " "
716F	29.8	" " " "
716G	29.9	" " " "
716H	30.1	" " " "
716I	30.2	" " " "
716J	30.3	" " " "
716K	30.4	" " " "
717A Chan 1	40.2	RadSafe Party - RadSafe Boats
717B Chan 3	40.6	" " " "
717C Chan 5	41.0	" " " "
717D Chan 7	41.4	" " " "
717E Chan 9	41.8	" " " "
718A	2.836	RadSafe Boats - RadSafe Centers
718B	4.535	" " " "
718C	5.205	" " " "
718D	5.545	" " " "
720A	35.8	Inter RadSafe Center Channel
720B	36.0	" " " "

[redacted]

UNCLASSIFIED

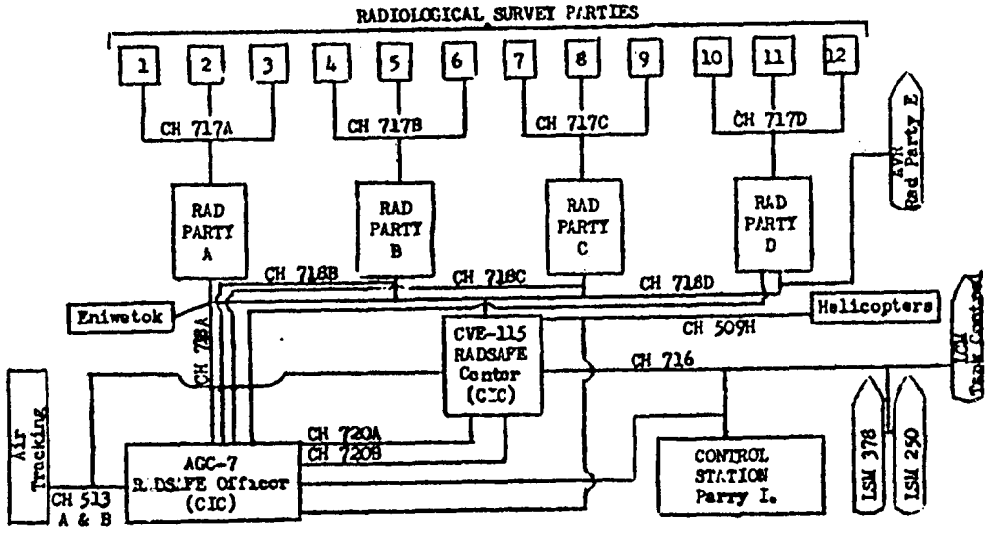

TAB 2 TO ANNEX F

Op Plan, COMTASKGROUP 7.6 No. 1-46

[redacted]

HEADQUARTERS
TASK GROUP 7.6
U.S.S. BAIROKO (CVE-115)

TAB 3 TO ANNEX F
OP-PLAN COMTASKGROUP 7.6 NO. 1-48

PART I

VOICE RADIO CALL SIGNS

ENCODE	VOICE CALL
CJTF7	SALVATION
JTF7	FRATERNITY
COMMANDER AIR FORCES JTF7	BIG BEN
DEPUTY CJTF7 (GEN. KENNER)	BIG BEN
DEPUTY CJTF7 (ADM. PARSONS)	BANDANNA
CHIEF OF STAFF JTF7	JEHOVAH
OPERATIONS OFFICER JTF7	BARB
COMMUNICATIONS OFFICER JTF7	BEERBELLY
RADSAFE OFFICER JTF7	DANGEROUS DAN
CTG 7.1	BUCK ROGERS
TG 7.1	LITTER HEAD
CTG 7.2	KILLER KANE
TG 7.2	MILL WHEEL
CTG 7.3	JUNGLE JIM
TG 7.3	NORTHLAND
MOUNT MCKINLEY (AGC7)	FRAGMENT EASY
BAIROKO (CVE-115)	THREESCREW
CTG 7.4	BOLIVAR
TG 7.4	SPELLBOUND
CTG 7.5	MINTHEART
TG 7.5	PEANUT BUTTER
CURTISS	RESPOND JIG
ALBEMARLE	DAILY WILLIAM
CTG 7.6	TURKEY TROT
TG 7.6	HIGH SCHOOL
RADSAFE PARTY #1	BUMSTEAD
RADSAFE PARTY #2	JOINT
RADSAFE PARTY #3	HARIKARI
RADSAFE PARTY #4	DALMATION
RADSAFE PARTY #5	CALLA LILLY
RADSAFE PARTY #6	DATA
CTG 7.7	TOUCHDOWN
TG 7.7	PENMANSHIP
(ISLANDS)	
ANIYAANII ISLAND	BOTTLENOSE
AOMON-BIIJIRI ISLAND	ELAINE
CORAL HEAD ISLAND	HATCHERY
ENGEBI	GEESE
ENIWETOK ISLAND	ARTICHOKE
JAPTAN ISLAND	BARBARIC
KWAJALEIN ISLAND	BRIGHT EYES
PARRY ISLAND	BAGGY PANTS
RUNIT	DAILY DOUBLE

[redacted]

TAB 3 TO ANNEX F

PART II

VOICE CALL	PEOPLE
ARTICHOKE	EWINETOK ISLAND
BAGGY PANTS	PANAY ISLAND
BANDANNA	DEPUTY CJTF 7 (ADM. PARSONS)
BARNACLE	JAPTAN ISLAND
BARB	OPERATIONS OFFICER JTF7
BEEKBELLY	COMMUNICATIONS OFFICER JTF7
BIG BEN	COMMANDER, AIR FORCES JTF7 AND DEPUTY CJTF 7 (GEN. KEPNER)
BOLIVAR	CTG 7.4
BOTTLENOSE	ANIYANAN ISLAND
BRIGHT EYES	KWAJALEIN ISLAND
BUCK ROGERS	CTG 7.1
BUMSTEAD	RESCUE PARTY #1
CALLA LILLY	RESCUE PARTY #5
DAILY DOUBLE	ADMIT ISLAND
DAILY WILLIAM	ALBEMARLE (AV-5)
DALMATION	RESCUE PARTY #4
DANGEROUS DAN	RESCUE OFFICER JTF7 (IN AGC7)
DATA	RESCUE PARTY #6
ELAINE	ANMON-NIJIRI ISLAND
FLINTHEART	CTG 7.5
FRAGMENT EASY	MOUNT MCKINLEY (AGC7)
FRATERNITY	JTF7
GEESE	ENGEBI ISLAND
HARIKARI	RESCUE PARTY #3
HATCHERY	CORAL SEAP ISLAND
HIGH SCHOOL	TG 7.6
JEHOVAH	CHIEF OF STAFF, JTF 7
JOIST	RESCUE PARTY #2
JUNGLE JIM	CTG 7.3
KILLER KANE	CTG 7.2
LITTLEHEAD	TG 7.1
MILL WHEEL	TG 7.2
NOMTHLEHP	TG 7.3
PEANUT BUTTER	TG 7.5
PENMANSHIP	TG 7.7
RESPOND JIG	CURTISS (AV-4)
SALVATION	CJTF7
SPELLBOUND	TG 7.4
THUMBSCREW	BARONO (CVE-116)
TOUCHDOWN	CTG 7.7
TURKEY TROT	CTG 7.6

[redacted]

UNCLASSIFIED

[redacted]

HEADQUARTERS
TASK GROUP 7.6
JOINT TASK FORCE SEVEN
U.S.S. PAMPOKO (CVE-115)
Fleet Post Office
San Francisco, California

6 March 1946

OPERATION PLAN
COMTASKGROUP 7.6 No. 1-46

ANNEX G - Technical Measurements Unit - 7.6.6

I. UNIT ORGANIZATION

7.6.6 Technical Measurement Unit - - Dr. H. SCOVILLE Jr.
Operations Officer - - LCDR E. R. KING

PROJECTS

Project 7.1-17/RS-1
Gamma Radiation vs Distance - - Dr. H. Scoville, Jr. AFSWP
Cdr. E. J. Hoffman, USN
Dr. Lauriston TAYLOR (Wash.)

Project 7.1-17/RS(ES)-2
Gamma Radiation Shielding - - - Cdr. E. J. Hoffman, USN
Lt. E. C. Vicars, USN

Project 7.1-17/RS-3
Residual Contamination in Crater - - - Cdr. H. L. Andrews, USPHS
Mr. R. E. Murphy, USPHS

Project 7.1-17/RS(BA)-4
Air Survey of Ground Contamination - - - - - LCDR E. R. KING, USN

Project 7.1-17/RS(ES)-5
Exposure of panels for Decontamination and Heat Sensitivity Studies - Cdr. E. J. Hoffman, USN
Lt. E. C. Vicars, USN

Project 7.1-17/RS-6
Neutron Absorption - - - - - - - Dr. H. Scoville, Jr. AFSWP

Project 7.1-17/RS-7
Radioactivity in Cloud - - - - - Dr. H. Scoville, Jr. AFSWP
LCDR. E. R. KING, USN
LTCOL J. J. CODY, JR, USAF

[redacted]

UNCLASSIFIED

Project 7.1-17/RS(CC)-8
Test of Efficiency of Field Collective Protector - - Dr. B. Siegel, ChemCorps
Cdr. H. L. Andrews, USPHS
Dr. R. E. Murphy, USPHS

Project 7.1-17/RS(CC)-9
Particle Size of Material in Cloud - - Dr. B. Siegel, ChemCorps
Cdr. H. L. Andrews, USPHS
Dr. R. E. Murphy, USPHS

Project 7.1-17/RS-10
Thermal Radiation Papers - - - - Dr. H. Scoville, Jr, NPS&T
Cdr. R. L. Langer, USNR

Project 7.1-17/RS(RCRU)-11
Test of Direct Reading of Crystal Dosimeters - - - Capt. R.H. Draeger, USN (Quartz Dosimeters)
Cdr. E.J. Hoffman, USN (PuShips Dosimeters)

Project 7.1-17/RS(FM)-12
Exposure of Fissionable Army Material - Capt. R. H. Draeger, USN

Project 7.1-17/RS(FM)-13
Thermal Radiation Pulses - - - Cdr. R. L. Langer, USNR
Capt. R. H. Draeger, USN

Project 7.1-17/RS(RM)-14
Test of Metal Containers for Suitability in Exposing Animals at Close Range - Capt. R. H. Draeger, USN

II. MISSION

The Technical Measurements Unit will effect, coordinate, and have responsibility for all scientific and technical measurements assigned to the cognizance of J.S. 7.6. These include projects suggested by the JSWP, the Bureau of Medicine and Surgery; Bureau of Ships, and Bureau of Aeronautics of the Navy, and the Chemical Corps of the Army. In general these involve studies of the nuclear and optical radiation effects of the atomic bomb detonations.

III. OPERATIONS

Project 7.1-17/RS-1 Gamma Radiation vs Distance.

A. Film badges capable of measuring gamma exposure from 0.01 to 20,000 roentgens will be placed for each shot on stakes at 100 yard intervals starting 400 yards from the point of detonation.

[redacted]

[redacted]

ANNEX G (Cont'd)

B. Installation of stakes will be completed on Engebi Island by X-ray - 15 day, on Aomon, Biijiri, and Rojoa by X-ray minus 12 day and on Runit by X-ray minus 10 days.

C. Film badges will be attached to stakes on morning of X-ray - 1, Yoke -1, and Zebra - 1 days. Paper to simulate films will be used for all rehearsals.

D. Collection of film badges will commence on X-ray plus 2, Yoke plus 2, and Zebra plus 2 days, or as soon as radiological survey of Zero Island is completed, and will continue as rapidly as radiological safety conditions permit. The time of collection and the intensity of the gamma radiation as measured with a portable meter will be recorded as each badge is collected.

E. Calibration and analysis of all film badges will be carried out by Dr. Taylor at the National Bureau of Standards, Washington, D.C.. Films will be air shipped by courier to the ZI as rapidly as possible, probably commencing 1 week after each shot. A priority list for analysis of films will be prepared.

Project 7.1-17/RS(PS)-2 Gamma Ray Shielding.

A. Simple Shields of steel and of concrete will be erected on Engebi and Aomon Islands for the purpose of placing film badges behind and within them. Other shields will be erected simulating enclosures of more or less completeness and geometrical configuration. In addition numerous film badges will be placed in the corps of Engineers Type A and B dugouts, Bureau of Yards and Docks, and AFC shelters. At several locations, lead-film howitzers will be placed to measure resultant atmospheric and ground scattering.

B. All test erections will be in place by X-ray minus 9 and all sheltered film badges installed on Engebi prior to X-ray minus 2 day. All test erections will be completed on Aomen, Biijiri, and Rojoa Islands on Yoke minus 2 day and all sheltered film badges will be installed by this time.

C. Collection of film badges will begin on X-ray plus 2 day and Yoke plus 2 day and continue until completed. Final completion depending upon safety considerations. Two parties will be engaged in recovery operations accompanied by monitors for four working days. All sites will be photographed before and after each test.

[redacted]T

[redacted]

ANNEX G (Cont'd)

D. Scaling, recording and analysis of film data will be as specified in Project 7.1-17/[illegible]-1, paragraph D. and E..

Project 7.1-17/[illegible]-3 Residual Contamination.

A. Beta [illegible] decay curves will be run on samples of crater material after each shot by the Laboratory unit (7.6.4). The energy of the radiation from the sample will also be measured as a function of time by interposing aluminum filters between the sample and the counting tube. Decay curves will also be run on a limited number of samples of other radioactive materials, such as dust falling out of the cloud, contaminated water, and structural materials.

B. At 6 to 10 hours after each shot, a one pound crater sample will be delivered to a gamma monitor near tank revetment. The sample will be transferred to CVE by helicopter or small boat with monitor aboard. Decay measurements will then be commenced on the CVE by the Laboratory Unit (7.6.4).

C. Samples of other radioactive materials will be collected by monitors in the course of their routine duties and returned to CVE for such analysis as deemed necessary.

D. Long term studies on the samples will be continued as deemed necessary at the National Institute of Health, Washington, and at the Radiation Laboratory, Hunters Point.

E. The results of all measurements will be coordinated with the radiochemical analysis of the LJ-2 group. A beta decay [illegible] of a sample of material from the cloud will be run by Dr. Spence for comparison with the ground sample curves.

Project 7.1-17/[illegible](PA)-4 Air Survey of Ground Contamination.

A. The survey is to provide rapid information on intensities of nuclear radiations within the blast area and to accumulate precise scientific data in regard to the attenuation of gamma radiation above land and sea surfaces contaminated by atomic bomb explosions.

B. The Air Survey of Ground Contamination will be made first in a C-47 aircraft furnished by CJ 7.4. This plane will carry a radiological Safety Officer with necessary equipment and instruments for making such a survey.

C. The crew of the C-47 aircraft will be at Eniwetok on P, X, Y, and Z days by H-hour. After H-hour the crew will

[redacted]

be prepared to take-off immediately in case the cloud should drift across the island. The survey unit will take-off on the mission at one-hour plus thirty (30) minutes and at 5,000 feet altitude orbit at a point five (5) miles up wind from Point Zero until directed by Commander, Air Forces to proceed with the flight plan as outlined below. The survey plan will consist of two (2) phases as follows:

Phase I - When directed by Commander, Air Forces, the C-47 will commence survey at 5,000 feet. First leg will be over point Zero on a bearing determined so as to avoid any downwind contaminated air mass. All legs will be made at a constant air speed and along a constant bearing for three (3) miles on either side of point Zero. The plane shall then turn and make another leg at an angle of 045° from the original leg. This maneuver will be continued until a complete asterisk pattern with legs at an angle of 45° has been made. After completing this horizontal flight pattern the same pattern will be flown at 4,000 feet, 2,000 feet, and lower if radiological safety conditions permit. After completion of the patterns at lower altitudes the 3,000 feet pattern will be flown.

Phase II - After completion of Phase I, the Survey Unit will retire from the contaminated area and request permission to survey above 5,000 feet. If approval is received, the survey unit will fly a six (6) mile leg at 6,000 feet along the same axis as the first leg in Phase I. The second leg will be flown at 7,000 feet on an axis 180° to the first leg. The unit should be prepared to ascend by 1,000 feet intervals on each reversal until normal background is reached.

D. The Survey Unit will be prepared to repeat the flight above on succeeding days, if deemed necessary.

E. If needed for radiological safety purposes, the Air Survey of Ground Contamination will be continued in a helicopter, type H03S. The general plan for this survey will be vertical flights over radioactive areas, taking readings of the radiation intensity at various altitudes. These aerial readings will be integrated with ground reading made by ground monitors directly beneath the helicopter unit.

F. The helicopter survey will not be conducted until the ground radiation intensity is low enough to permit ground monitoring. If deemed necessary, flights on succeeding days will be made, and readings taken over the same spots as on the first day of the survey.

Project 7.1-17/AE(BS)-5 Exposure of Panels for Decontamination and Heat Sensitivity Studies.

A. Panels coated with samples of approximately fifty different types and grades of surfaces representing possible coatings for ships, aircraft, and shore constructions will be exposed at four distances: 750, 1,000, 1,250, and 1,500 yards. Two panels will be mounted for X-ray test and six (6) for Yoke test. Several plastic coatings will be applied to Yards and Docks structures at the 500 yard range for comparison. These panels have been minutely examined by the preparing agencies and will be photographed after erection.

B. All erections will be completed by X-ray minus 14 days.

C. All panels will be collected commencing X-ray plus 2 and Yoke plus 2 days. These materials will be photographed in place and each plate monitored prior to disassembly. Should contamination be present, field decontamination measures will be taken on one half of the specimens. All specimens will be packaged for return to the U.S. for distribution to laboratories. There they will be decontaminated under controlled conditions, and further examined in minute detail.

Project 7.1-17/RS-6 Neutron Absorption.

A. Six samples of sulphur supplied by LMJ-2 will be placed in various structures to measure the degree of the protection supplied against fast neutrons. For X-ray test, one will be placed in each of the Corps of Engineers Type A and Type B structures and in the lead-lined container close at the point of detonation. Locations for the other tests will be selected later.

B. Two days prior to the shot samples will be placed in position in the structures and containers. Collection will commence on X-ray plus 2, Yoke plus 2, and Zebra plus 2, or as soon as radiological survey of zero island is completed and will continue as rapidly as radiological conditions permit. A monitor will be required to accompany the man collecting the neutron samples.

C. Samples will be returned to AF-8 for counting by LMJ-1. Results of these analyses together with those obtained with the other 2 neutron detectors will be made available to TG 7.6.

Project 7.1-17/RS-7 Radioactivity in Cloud.

A. Film badges will be placed in personnel locations on board drone planes to obtain information on exposure of personnel in a plane passing through the cloud.

B. On X-ray minus 1, Yoke minus 1, and Zebra minus 1, film badges will be placed in predetermined locations on drones planes at Kwajalein by Radiaf monitor.

C. Film badges will be collected on X-ray plus 1, Yoke plus 1, and Zebra plus 1 days on Eniwetok by Radiaf monitor checking drone planes.

D. Films will be collected and analysed with other films (See Par. E. Project 7.1-17/RS-1). A plot of the paths of the drone planes through the cloud will be needed for evaluation of the results.

Project 7.1-17/RS(CC)-8 Test of Efficiency of Field Collective Protector

"A. Installation of a collective protector in the 1500 foot Corps of Engineers Type A dugout will be initiated on X-ray minus 31. One end of the flexible hose connected to the collective protector units will be welded to the 6 inch air intake. After the collective protector is completely assembled and installed the flow rate will be checked by means of a pitot tube. The pressure attained in the dugout while the unit is in operation will be recorded by a draft gauge and any leaks corrected if necessary. A second collective protector will be installed on a boat or raft anchored to the roof 2500 yards downwind of the Engebi Tower on a bearing 260°. For Yoke test this raft will be moved to a point about 1500 yards downwind of the Aomon Tower."

B. Installation of the radioactivity detecting equipment inside the two Type A dugouts will be completed by X-ray minus 10. This will require two men to work with Commander Andrews and Mr. Siegel.

[redacted]

C. Before 1200 on X-ray minus 8 (Peter X-ray minus 1) the collective protectors and radioactivity detecting equipment in the Type A dugouts will be started by Mr. Siegel.

D. On X-ray minus 6 (Peter X-ray plus 1) collection of collective protector filter units will be simulated at the 1,500 foot station.

E. Before 1200 on X-ray minus 1 the collective protectors and radioactivity detecting equipment will be started by Mr. Siegel.

F. On X-ray plus 3, or when radiological safety conditions permit, the radioactivity records and collective protector filters will be collected from the 1,500 foot station by Mr. Siegel, a Radsafe monitor, and two men. This will be done after the structure has been opened, inspected and photographed by Major DeBarbeleben and a photographer.

G. On X-ray plus 15, or when radiological safety conditions permit, the radioactivity records and collective protector filters will be collected from the 1,000 foot station by Mr. Siegel, a Radsafe monitor, and two hands. This will be done after the structure has been opened, inspected, and photographed by Major DeBarbeleben and a photographer.

H. A sample of the charcoal and filter paper in the collective protectors will be tested for radioactivity by the Laboratory Unit (7.6.4) to determine the quantity collected by these materials. The radioactivity records of the detecting equipment will show how much radioactive material penetrated the collective protectors.

Project 7.1-17/RS(CC)-9 Particle Size of Material in Cloud.

A. Installation of cascade impactors in the four Corps of Engineer dugouts will be completed on X-ray minus 9. This will require one man to work with Mr. Siegel.

B. Two groups of four batteries each will be filled with electrolyte and charged for a period of 20-24 hours starting on X-ray minus 10.

C. On X-ray minus 8 (Peter X-ray minus 1) the batteries will be connected to the cascade impactor equipment, and the timer will be set to start and stop its operation.

D. On X-ray minus 6 (Peter X-ray plus 1) collection of the cascade impactor will be rehearsed at the 2,500 foot station.

E. On X-ray minus 1 the timer on the cascade impactor equipment will be set to start and stop its operation by Mr. Siegel.

F. On X-ray plus 2, or when radiological safety conditions permit, the cascade impactor at the 2,500 foot station will be collected.

G. On X-ray plus 3, or when radiological safety conditions permit, the cascade impactors at the 1,500 foot stations will be collected.

H. On X-ray plus 13, or when radiological safety conditions permit, the cascade impactors at the 1,000 foot station will be collected. The cascade impactors will be collected at each of the above mentioned stations by Mr. Siegel, accompanied by a Radsafe monitor. This will be done after the structure has been opened, inspected and photographed by Major DeBarbeleben and a Photographer.

I. The radioactivity of the material in each of the slides in the outside dosimeters will be determined by the Laboratory Unit (7.6.4). Afterwards, the slides will be placed in a holder and sent to the Army Chemical Center, Maryland, for determination of particle sizes by means of an electron microscope.

Project 7.1-17/83-10 Thermal Radiation Papers.

A. Heat sensitive papers supplied by Dr. Penny, British Ministry of Supply, will be placed in exposed positions to determine the extent of the thermal radiation from the detonations. These will be located on the same stakes as used for the gamma fields (see Project 7.1-17/83-1, paragraph A.). They will also be placed at the same locations as the [illegible] and panels being exposed to study thermal radiation effects (See Projects 7.1-17/83(BS)-8 and 7.1-17/83(BW)-13).

B. The papers will be distributed on X-ray minus 2, Yoke minus 2 and Zebra minus 2 days. Calculated distributions will be made with plus or minus two days.

C. The papers will be collected beginning on X-ray plus 2, Yoke plus 2 and Zebra plus 2 days and will proceed as rapidly as radiological safety conditions permit. The personnel collecting the fields (see Project 7.1-17/83-1) will collect the heat sensitive papers.

D. Calibration of the papers and correlation with human experiments has been arranged by Dr. Penny. Additional calibration will be done in connection with the work on Projects 7.1-17/83(BS)-8 and 7.1-17/83(BW)-13.

Project 7.1-17/83(BS)-11. Test of Crystal Dosimeters.

A. Some representative samples of various crystals and glass which are known to exhibit color changes upon exposure to X-rays will be placed in locations where total radiation dosages from 50 to 2,000 roentgens may be expected. Fifty (50) crystals of sodium chloride, lithium fluoride, and potassium bromide and chloride have been packaged in small aluminum tubes with adequate shock protection. Distribution will be made to exposed stations and inside various test structures which are adequately documented by other methods of total dose measurement.

B. No special construction or erection will be required. Distribution will be completed by X-ray minus 2 day and Yoke minus 4 day.

C. Recovery will commence on X-ray plus 2 day and Yoke plus 2 day as radiological conditions permit.

D. Provided adequate calibration charts are available, ten of the sets will be opened and read by a representative group of monitors with minimal instruction to determine in a preliminary manner their statistical accuracy and reproductibility. The yyyer glass and the remainder of the crystals will be returned to the U.S. for accurate analysis of their spectral absorption, study of their fading due to heat and light and complete documentation.

Project 7.1-17/83(BW)-12 Exposure of Biological Assay Material.

A. The object of this project is to obtain information regarding the effects of [illegible] ionizing radiation upon selected biologic material. The selection of this material was largely based upon the Bikini experiments. However, the plan is not to duplicate but rather to supplement and extend this experience. In most instances

[redacted]

the situation was based upon negative results previously obtained due to a low intensity of exposure. This was particularly true of bacteria and grain insects. On the other hand neurospora spores, corn and cotton seeds have been included since marked genetic changes have already been obtained in these species, and it is now desired to conduct studies at higher intensities of exposure.

B. The biologic test materials to be exposed under this project include the following:

Test Material	Supplying Agency
Neurospora Crassa spores and cultures	Calif. Inst. of Technology
Corn seed 6 varieties	U.S. Dept. of Agriculture
Cotton seed 23 varieties	U.S. Dept. of Agriculture
Grain insects 3 species	U.S. Dept. of Agriculture
Soils 3 types	U.S. Dept. of Agriculture
Bacteria 6 species	Biological Warfare Service Camp Detrick, Md.
Biologicals 9 items	Naval Medical Research Inst.

C. The plan is to expose samples of the above named biologic materials at 5 test stations ranging from 250 to 1,500 yards at Tests X-ray and Yoke. Since many of the test materials are adversely affected by high temperature a preliminary study of maximum temperature reached within exposure cells and packets will be made prior to the bomb detonations. In order to further reduce this hazard the placement of biologic material has been scheduled on X-ray minus 1 day and an attempt will be made to effect an early recovery following the completion of the radiologic 1 survey.

D. The return of most of the biologic test material is to be effected via air transportation following Test Yoke. Neurospora cultures (in all packages) are to be returned as quickly as possible by courier to the Radiation Laboratory at San Francisco Naval Shipyard following Tests X-ray and Yoke.

Project 7.1-17/RS(Bu)-13 Thermal Radiation Plaques.

A. Textiles, plasters, paints, metals and other heat sensitive materials are mounted on plaques at 5 different distances, 250 yards apart from the detonations. These plaques will be mounted on the racks holding other materials used in the days. Portions of the samples are covered by filters. Various thicknesses and colors are used to study relative importance of different parts of the spectrum used to study relative importance of different parts of the spectrum from below 3,000 angstroms to about 4μ. The nearer stations will have only heat resistant samples such as metallic plates. The distant plaques will carry papers, wool and other highly sensitive surfaces.

B. The plaques will be carried to the islands in boxes and will be kept in a shelter except for practice installations until Peter X-ray and Peter Yoke day minus 4. They will be distributed for P day and then covered until X-ray minus 1 and Yoke minus 1 day.

C. The plaques will be inspected and covered on X-ray plus 2 and Yoke plus 2 days and recovered as soon as convenient thereafter. Inspection personnel will be accompanied by a monitor and photographer equipped for color photography.

156

D. The recovered plaques will be shipped as quickly as possible to the N. Y. Naval Shipyard, Material Laboratory for measurement. Later they will go to the Naval Medical Research Institute for further study. The Material Laboratory has been making similar observations on corresponding material from Operation CROSSROADS. The NMRI is building an equipment for continuing the work on animals and human skin.

E. The miscellaneous materials set up on Project 7.1-17/RS (BS)-5 and the thermal radiation papers in Project 7.1-17/RS-10 will furnish additional data for the present project and it is intended that the coordinated results relative to energy radiation will be included in the report of project 7.1-17/RS(BM)-13.

Project 7.1 - 17/RS(BM)-14 Test of Animal Containers for Suitability in Exposing Animals at Close Range.

A. The object of this project is to develop means of exposing large animals such as swine to high intensity atomic bomb ionizing radiation. Although many animals were exposed to ionizing radiation at Bikini the level of intensity was comparatively low, and there was no opportunity to conduct early studies of high intensity irradiation. Almost no information regarding this problem was obtained at Hiroshima and Nagasaki. The ultimate object of this project is therefore to autopsy heavily irradiated animals for gross and microscopic pathologic study beginning as early as three to four hours after irradiation as part of a program for the study of radiation illness.

B. Four animal exposure chambers about 28 inches in diameter and 8 feet long, have been constructed to implement this project. Two of the chambers are mounted on rafts to be anchored at a predetermined distance and two are fitted with towing cables for use on land. These animal chambers are sufficiently large to house individual cages for two medium size swine and the necessary equipment such as oxygen supply necessary for their survival.

C. The provision of conditions suitable for survival within a closed tank for 24 to 48 hours presents numerous problems. Preliminary experiment with a tank similar to the above at the Naval Medical Research Institute, Bethesda, Maryland, indicates that the simple expedient of providing a steady flow of 40% oxygen from a 200 cubic feet tank is sufficient for survival if the outside temperature of the tank does not rise above 800 - 900 F. A liberal supply of water was provided but no attempt was made to absorb CO_2 or moisture. It is expected that the Tests X-ray and Yoke will provide data from which definite survival conditions can be worked out in the Laboratory.

D. It is planned to place the animal exposure chambers in position for Test X-ray by X-ray minus 14 day and attempt to recover them for X-ray plus 4 . The land chambers will be at distances of 1,000 and 750 yards while the rafts will be anchored at 1,500 and 1,900 yards respectively. Measurements will then be made for several days regarding the interior temperatures of the chambers and to what extent they are affected by sun and weather. Attempts will be made to influence the internal temperature by reflecting surfaces and sunshades. The temperature effect of partial immersion in sea water of the chambers on rafts will also be studied as well as the effects of blast upon the tanks at the several distances at Tests X-ray and Yoke.

[redacted]

E. It is anticipated that the best results from the standpoint of animal survival and early recovery will be had with the chambers on rafts. It is expected that the internal temperature of the partly submerged containers will rise but slightly above that of the sea water. Likewise recovery of the chambers on rafts should be comparatively easy by towing the raft to the side of the mother ship releasing the chamber and hoisting the chamber on board.

IV. REPORTS

A. The person in charge of each project under the cognizance of the Technical Measurements Unit (7.6.6) will be responsible for the preparation of a report covering the work carried out under that project. This will include a description of the instruments and materials used, methods of making the measurements, and, the results obtained with an analysis thereof.

B. All reports will be submitted by the project officer to the Commander, Technical Measurements Unit (7.6.6) for transmittal to the Scientific Director via the Commander Task Group 7.6 and the Test Director.

C. Final reports for all projects except those requiring later measurements will be required by the Commander, Technical Measurements Unit (7.6.6) by 20 June. These will be submitted to the Scientific Director by 30 June for inclusion in the Scientific Director's report which will be completed 31 July. For all projects requiring continuing work an interim report will be submitted by 20 June giving all information on measurements made up to that time. The final report will be submitted as soon as final measurements can be completed. A preliminary report will be required upon arrival at Eniwetok giving details of all equipment and methods of measurement being used. This will be in such a form that it can be included as a part of the final report with only minor changes. No reports will be distributed until they have been submitted to the Scientific Director and approval has been received from him.

RADIOLOGICAL RECORDS

I. OVER EXPOSURE

The Task Force has set the limit of over exposure at 3R for authorized individuals and particular jobs only. This paper constitutes an interpretation of the meaning and intent of Annex J to F.O. #1. It must be assured for this operation that the maximum permissible dose of .1R per day has no ill effects on the human either immediately or in the future. On this basis over exposure is not received until .1R per day has been exceeded. In calculating the degree of exposure it can then be assumed that the first .1R received is normal and not over exposure. Example: An individual receives .1R per day for four days - his over exposure is 0. If on the fifth day he receives 2.4R, his over exposure is 2.3R. If on the sixth day he receives .8R, his over exposure for that day is .7R and should be added to the fifth day's over exposure for a total of 3R. That being the prescribed limit the individual is reported over exposed and withdrawn from radiation activity for thirty days based on a recovery factor of .1R per day. If, however, on the sixth day he had received .2R, his over exposure would be .1R which added to the fifth day's reading of 2.3R would be 2.4R total over exposure. If he received no radiation exposure for the next five days his total over exposure would drop to 1.9R on the basis of the recovery factor of .1R per day. The over exposure total would decrease each day by .1R if no radiation was received. If, however, he received .1R each day the total of over exposure would remain 2.4R until the day of no exposure or less than .1R. He will recover each day .1R or the fractional difference between .1R and the amount received. This over exposure total will be kept on a Radiation Exposure Record.

II. MEDICAL PLAN OF THE RADSAFE UNIT

All individuals who may be exposed to radiation during the operation of Task Force 7 will be examined physically prior to departure from the continental limits of the United States. This examination will consist of a complete physical examination comparable to the annual examination required of military personnel and will include a chest X-ray, complete gross and microscopic urinalysis, and a complete blood count to include a differential white blood count. If a physical examination comparable to the above has been taken within the period 15 July 1947 and 1 January 1948, it need not be repeated except for the chest X-ray, urinalysis, and complete blood count. The fact that the individual was found physically qualified during that period for general service afloat or overseas must be certified by that individual. All physical examinations will be evaluated by the Radiological Records Unit and a decision rendered as to the individual's physical qualifications for work with radioactive material. All civilians or military personnel found not qualified for duty afloat or overseas by military standards or for work with radioactive material will be disqualified. Waivers and exemptions to the above rule will be made by the Task Force Commander. The standards to be followed in the evaluation of the blood counts will be for the red blood count and haemoglobin, those normally accepted by the medical profession.

[redacted]

Annex
APPENDIX "H"

II. MEDICAL PLAN OF THE RADSAFE UNIT (Continued)

In regard to the white blood count the following limits of normality will be acceptable and are based on recent and continuing studies of the normal whitecount:

( ) [illegible] ite count greater than 5,000 and less than 14,000.
(b) Differential count in which the lymphocytes do not exceed the neutrophiles.

Additional information as needed for the physical evaluation of an individual may be requested. Additional examinations may be requested at any time during the operation of the Task Force if the information is required to protect the health of the individual. A file of all physical examinations received by the Radiological Records Unit and all Radiation Exposure Records will be maintained by that unit. There will be an interchange of information between T.G. 7.6 and the T/F Medical Officer on medical data required for the evaluation of the individual's radiation health record.

III. REVIEW BOARD

The Review Board will have the following records available for consideration of any individual's radiation history:

(a) Individual Medical File

(b) Group Exposure Record

(c) Radiation Exposure Record

From the above data the Review Board will render a decision as to the individual's availability for future work in the contaminated area. If an individual has received over .1R or if an individual authorized to exceed that limit, has received or is approaching the limit of 3R over the daily permissible dose, this fact will be reported. The information on personnel reaching 3R will include the date that the individual may resume activity in the contaminated area. The board will consider the individual cases as soon as practicable after exposure.

The board having comparative records available on individuals working the same party and all personnel exposure data may be in a position to evaluate individual instruments and will notify the Laboratory Unit of any instrument that is under suspicion. Evidence of a false reading by an instrument should be entered on the Group Exposure Record to clarify that record for future evaluation and for medico-legal purposes.

IV. GROUP EXPOSURE RECORDS

Proper authority will supply the names of all individuals of each separate work party, organization to which they belong, general nature of mission, and the time of departure and return to the Radiological Safety Unit, prior to the departure of the party destined to enter a radioactive area.

[redacted]

IV. GROUP EXPOSURE RECORDS (Continued)

This information will be entered on the Group Exposure Record by the RadSafe Operation Section and delivered to the radiological safety monitor assigned to that party. It will be the monitor's responsibility to enter the number of the film badge and pocket dosimeter to be issued each party member on this form. The monitor will be responsible for the entering on this form of the pocket dosimeter reading opposite the appropriate name and the collection of the film badges and other instruments. If in the opinion of the monitor any or all members of the party require personal decontamination or that any unusual event related to safety occurred, the appropriate remark will be entered by him on this form. At the bottom of the report the monitor will enter any appropriate remark regarding the functioning of his instruments. The monitor will return the Group Exposure Records to the instrument issue desk promptly upon returning to the CVE. It will be certified by him. This record will then be sent to the Radiological Records Unit for the entry of the film badge readings. This unit will dispatch the completed record to the Review Board for consideration of exposure data in the event that over exposure is indicated. Upon the completion of this review, the Group Exposure Record will be returned to the Radiological Records Unit for extraction and recording of exposure data on the individual Radiation Exposure Record. The Group Exposure Record will then be filed.

[redacted]

160

UNCLASSIFIED

[redacted]

HEADQUARTERS
TASK GROUP 7.6
JOINT TASK FORCE SEVEN
U.S.S. BAIROKO (CVE-115)
Fleet Post Office
San Francisco, California

28 February 1948

SPECIAL ORDERS
NUMBER 1

1. The following officers having reported to Task Group 7.6 are further assigned to Task Unit 7.6.1 (AIR MONITOR UNIT) for primary duty as indicated, effective on or about 29 February 1948.

COL Robert N. ISBELL, Jr.	AO-28830	USAF	CTU 7.6.1
LT COL Joseph J. CODY, Jr.	AO-45772	USAF	
LT COL Robert B. LEWIS	O-21039	MC	
LT COL Clark B. PROCTOR	O-295886	MC	
MAJ Carl W. BARTLING	AO-43091	USAF	
MAJ Allen R. CROW	O-31105	MSC	
MAJ James T. HAUDEN	O-26972	MSC	
MAJ Jack KAYE	O-1534301	MSC	
MAJ Travis M. SCOTT	AO-44451	USAF	
CAPT Malcolm A. HORMATS	AO-885364	USAF	
CAPT Robert H. KLOTZMAN	O-424503	MSC	
CAPT William M. LAND, Jr.	AO-45755	USAF	
CAPT William S. MATTHEWS, Jr.	AO-42499	USAF	
CAPT Russell J. NASH	AO-44813	USAF	
CAPT James F. PARKER	O-31301	MSC	
CAPT Adam E. SCHLANSER, Jr.	O-1542453	MSC	
CAPT Earle E. SWEETLAND	AO-35769	USAF	
CAPT Carl E. TREXLER	AO-38869	USAF	
CAPT Clyde H. WESTBROOK, Jr.	O-47007	CrlC	
1st LT Jack BUCHANAN	AO-49981	USAF	
1st LT John M. GEARY	O-56930	MSC	
1st LT Edward P. RADFORD, Jr.	O-1736590	MC	
1st LT George A. SAXTON, Jr.	O-1715784	MC	
2nd LT James H. CLEN	AO-589812	USAF	

/s/ Frank I. Winant, Jr.
FRANK I. WINANT, JR.,
Commander, U.S. Navy,
Commander, Task Group 7.6.

Distribution: SPECIAL

CERTIFIED A TRUE COPY
Maurice M. Anderson
Maurice M. ANDERSON,
Captain, CE.

[redacted]

UNCLASSIFIED

[redacted]

UNCLASSIFIED

HEADQUARTERS
TASK GROUP 7.6
Joint Task Force Seven
U.S.S. BAIROKO (CVE-115)
Fleet Post Office
San Francisco, California

29 February 1948

SPECIAL ORDERS
NUMBER 2

1. The following officers and enlisted men having reported to Task Group 7.6 are further assigned to Task Unit 7.6.2 (STAFF UNIT) for primary duty as indicated, effective on or about 29 February 1948.

COL Karl H. HOUGHTON	0-20411	MC	CTU 7.6.2
LCDR Donald C. CAMPBELL	108094	EDO	Logistics Officer
LT Gerald M. MC DONNELL	0-43251	MC	Photo Liaison Officer
CAPT William F. BOLEN	0-42875	CMP	Historical Officer
LT Col James E. HELGESTAD	0-40003	SIG C	Communication Officer
CAPT Maurice M. ANDERSON	0-288768	CE	Administrative Officer
LTJG Cameron W. CROMSDELL	551 93 61	USN	
LT John R. SHILEY, Jr.	311 29 10	USN	
LT William B. DENNY	279 84 48	USN	
LT Dudley C. WILLIAMS	355 72 36	USN	
LT(JG) George L. ROSICK, Jr.	787 69 62	USN	
LT William T. FORTON	359 02 83	USN	
LT(JG) Kenneth R. SCOTT	641 82 70	USN	
LT(JG) Charles E. FOX	275 99 56	USN	

2. The following officers having reported to Task Group 7.6 are further assigned to Task Unit 7.6.3 (OPERATIONS UNIT) for primary duty as indicated, effective on or about 29 February 1948.

LCDR William W. STONE, Jr.	0-40712	CrlC	CTU 7.6.3
LT Harvey E. SHEPHERD	0-43086	CrlC	
CDR Henry E. COE	178665	CIC	
LCDR James C. OLDFIELD	82491	LINE	
LT John F. KIMBEL	0-26480	CE	
LT(JG) John C. O'LEARY	271535	MC	
Lt Lt Delbert S. BARTH	0-28052	CrlC	

3. The following officers and enlisted men having reported to Task Group 7.6 are further assigned to Task Unit 7.6.4 (LABORATORY UNIT) for primary duty as indicated, effective on or about 29 February 1948.

CDR Howard L. ANDREWS	5429	Senior Scientist USPHS	CTU 7.6.4
LT Norris F. MURPHY	204067	LINE	
DR. Carl MENZER		AEC	
DR. Raymond E. MURPHY		AEC	
DR. Adrian DAHL		AEC	
CETM Michael FAZIO	238 68 56	USN	
CETM Harry KRAMER	404 97 62	USN	
CETM Paul F. MADEMANN	243 99 10	USN	
ETM1 Robert N. SCHAPPACHER	270 84 26	USN	
PHOM3 James G. FLETCHER	619 72 16	USN	
PHOM3 Ernest B. LEIBE	225 77 89	USN	
PHOM3 Edward J. RHENISH	248 04 45	USN	
PHOM3 James M. VARNUM	321 97 20	USN	

162

UNCLASSIFIED

[redacted]

SPECIAL ORDERS NUMBER 2 (Cont'd)

4. The following officers and enlisted man having reported to Task Group 7.6 and further assigned to Task Unit 7.6.5 (RADIOLOGICAL RECORDS UNIT) for primary duty as indicated, effective on or about 29 February 1948.

MAJ James T. BRENNAN	0-31183	MC	CTU 7.6.5
CDR. Joseph L. MORTON		MC	
CPHM Arthur G. KELLER	321 20 44	USN	

5. The following officers and enlisted men having reported to Task Group 7.6 are further assigned to Task Unit 7.6.6 (TECHNICAL MEASUREMENTS UNIT) for primary duty as indicated, effective on or about 29 February 1948.

CDR. Herbert SCOVILLE, Jr.		MFSWP	CTU 7.6.6
LT Rupert H. DRAEGER	61027	MC	
LT Edmund J. HOFFMAN	77132	LINE	
LT Adolph M. LANGER	78012		
LT Elmer R. KING	113136	MC	
LT Earl C. VICARS	139374	EDO	(Forward Area)
LT Bernard SEIGEL		CmIC	
CPO Oliver E. HARMON	382 28 61	USN	
CPO Samuel F. JOHNS	341 95 53	USN	
CPO John E. MURPHY, Jr.	381 22 92	USN	
CPO David L. PEARSON	725 91 21	USN	

6. The following officers and enlisted men having reported to Task Group 7.6 are further assigned to Task Unit 7.6.7 (MONITOR UNIT) for primary duty as indicated, effective on or about 29 February 1948.

LCDR Bryan H. SMITH, Jr.	76857	LINE	CTU 7.6.7
PHCM Truman F. COOK	044727	CmIC	
MAJ Leonard J. GOODSELL	024472	CE	
MAJ Donald W. MATHER	044458	CAV	
LCDR Randolph M. ELDRIDGE	107365	USNR	
LCDR Louis OLIGARI	122589	LINE	
LCDR Jacob J. VANDERGRIFF Jr.	82478	LINE	
LCDR August T. ROSSANO Jr.	2437	San Engr.	
LCDR Edward H. FRANKS	053431	FA	
LCDR Sidney GAINES	039344	MSC	
LCDR Meridith MALLORY Jr.	01736114	MC	
LCDR Oliver H. STEED	043177	MSC	
LT Paul E. SPEICHER Jr.	191332	LINE	
LT Jack A. COX	208039	CEC	
LtLT John A. PIERCE Jr.	056915	CmIC	
LTJG Oliver L. BABCOCK	252657	MC	
LTJG Albert J. CULLEN	340584	MEDO	
LTJG David L. FLYNN	401325	CEC	
LTJG Cushing PHILLIPS Jr.	331448	CEC	
2LT Laurence H. WOODS	029952	USMC	
WOLT Harley E. VENTERS	028376	FA	
ENS Donn L. ASHLEY	447005	LINE	
1Sgt Temple J. DAUGHERTY	18033682	USA	
1Sgt John H. HERMANSON	20252640	USA	
1Sgt William M. LONG	17009062	USA	
1st Sgt John C. MILSON	12060219	USA	

7. Upon reporting to Task Group 7.6 the following civilians are to be further assigned to Task Unit 7.6.8 (ADVISORY UNIT) for primary duty.

163

Dr. James F. NOLAN	AEC CTU 7.6.8
Dr. Harry WHIPPLE	AEC
Dr. Norman P. KNOWLTON Jr.	AEC

8. Confirming verbal order of Commander Task Group 7.6 of 15 February 1948, CDR Thomas R. FONICK, 73129, LINE, is appointed Commander Task Unit 7.6.9 (REAR ECHELON UNIT) with station, Armed Forces Special Weapons Project, Washington, D.C.

9. The duty assignments indicated in the special orders are for functional purposes. Administration of the foregoing personnel remains in the Office of Commander Task Group 7.6.

/s/FRANK I. WINANT, Jr.
Commander, U.S. Navy,
Commander, Task Group 7.6.

Distribution: SPECIAL

CERTIFIED TO BE A TRUE COPY

M.M. ANDERSON, CAPT, USAF.

[redacted]

HEADQUARTERS
TASK GROUP 7.6
JOINT TASK FORCE SEVEN
U.S.S. BAIROKO (CVE-115)
Fleet Post Office
San Francisco, California

[redacted]

RADSAFE ONE

14 March 1948

FROM: Commander, Task Group 7.6

TO: All Task Group Commanders

SUBJ: Radiological Safety - General

1. The Task Force Radiological Safety Plan states that "Radiological Safety of all military and civilian personnel is a command responsibility." Commander Task Group 7.6 is charged with effecting radiological safety regulations and reporting infractions thereof. His actions in effecting radiological safety must, in general, follow the normal chains of command. To assist Task Group Commanders in fulfilling their responsibilities, Commander Task Group 7.6 will issue Radiological Safety letters as conditions warrant. This is the first letter of this series.

2. Authority of the Monitor. Radiological Safety Monitors have been carefully selected, trained and equipped to evaluate conditions in radioactive areas. They are required to give timely advice to the leaders of parties which they accompany on all matters concerning radiological safety. They are required to warn such party leaders of all actual or impending infractions of Radiological Safety Regulations. Findings of the Monitors relative to Radiological hazards are not subject to review by party leaders. However, the Monitors lack authority to issue orders to party leaders and they have no police powers. It is therefore incumbent upon all responsible Commanders to issue such orders to party leaders as are necessary to insure that the Radiological Safety Regulations are not violated. An example of such action is cited in CTG 7.3 Operation Plan 1-48 Annex F paragraphs 1 and 2.

3. Task Group 7.6 OpPlan. Copies of this Operation Plan have been mailed to all addressees. This Plan was formulated with the primary object of assisting Radiological Safety Monitors in accomplishing their missions. There are, however, certain sections which are of concern throughout the Task Force. These are indicated below for dissemination and suitable action by Task Group Commanders:

OpPlan 1-48 Paragraphs V and VI.
Annex A (This is the Radiological Safety Plan and appears as Annex J of Field Order 1) It is recommended that the widest possible distribution consonant with security be made within the Task Groups. Paragraphs 4 and 6 of the Annex and Appendix 1 thereto should be stressed. Applicable sections of Appendix 2 should be read to all personnel.

[redacted]

SUBJ: Radiological Safety - General

Annex B Paragraphs II, III, IV, V, VI, and XIII.

4. Annex C and G should not be reproduced.

5. Persons with open cuts, wounds or sores should not enter radioactive areas. Monitors will caution all persons on this matter.

6. No personal valuables such as watches, rings, money, etc., should be carried into radioactive areas. If contaminated, the return of such articles on board ship is prohibited and they must be surrendered to the monitor.

/s/ Frank I. Winant, Jr.
FRANK I. WINANT, JR.,
Commander, U.S. Navy
Commander, Task Group 7.6

Copies to:

CJTF-7
CTU 7.6.9

TURE COPY
/s/ M. H. Anderson
Maurice H. ANDERSON,
Capt., CE

HEADQUARTERS
TASK GROUP 7.6
JOINT TASK FORCE SEVEN
U.S.S. BAIROKO (CVE-115)
Fleet Post Office
San Francisco, California

[redacted]1

15 March 1948

RADSAFE TWO

From: Commander, Task Group 7.6.
To : All Task Group Commanders.

Subject: Radiological Safety - Gas Masks.

1. It may be necessary to prescribe the use of gas masks for personnel working on Zero Islands after detonation.

2. Army assault masks with M-11 cannister are available for this purpose in Task Group 7.6 on the BAIROKO and a number of these will be cached on Zero Islands at appropriate times.

3. Personnel whose duties will require work on Zero Islands after tests may be sent to the BAIROKO for demonstrations and drills under supervision of Task Group 7.6 personnel. These demonstrations and drills will cover care, donning, fitting and testing of the masks.

4. These demonstrations and drills should be terminated on 3 April if practicable.

Frank I. WINANT, Jr.,
Commander, U.S. Navy,
Commander, Task Group 7.6.

cc: CJTF-7 (10)
CTU-7.6.9
CO, USS BAIROKO

SECRET

APPENDIX "E"

SECRET

HEADQUARTERS
TASK GROUP 7.6
JOINT TASK FORCE SEVEN
U.S.S. BAIROKO (CVE-115)
Fleet Post Office
San Francisco, California

16 March 1948

RADSAFE THREE

From: Commander, Task Group 7.6.
To: All Task Group Commanders.

Subject: Radiological Safety - Procedures for Handling Contaminated Materials.

1. Copies of instructions to monitors on the subject of "Procedures for Handling Contaminated Materials" are appended for your information.

/s/ Frank I. Winant, Jr.
Frank I. WINANT, Jr.,
Commander, U.S. Navy,
Commander, Task Group 7.6

Copy to:
CJTF-7
CTU-7.6.9

TRUE COPY

Maurice M. Anderson

MAURICE M. ANDERSON,
CAPT., CE

SECRET

UNCLASSIFIED

[redacted]

HS/ ooh

HEADQUARTERS
TASK GROUP 7.6
JOINT TASK FORCE SEVEN

DIRECTIONS TO MONITORS

PROCEDURES FOR HANDLING CONTAMINATED MATERIALS

I. GENERAL.

All materials and personnel leaving a contaminated area will be carefully monitored to insure that any significant contamination will be not spread to the supporting ships and forces. The following tolerances and procedures have been established for control and clearance of contaminated materials. In securing the monitor readings, every effort shall be made to obtain them in areas of lowest background.

II. Background less than 0.1 mr/hr Gamma.

A. Disposable Clothing.

Each article of clothing having any readings greater than 0.1 mr/hr Gamma above background will be discarded and clean clothing supplied. Clothing having readings less than 0.1 mr/hr Gamma above background will be considered as being uncontaminated and individual radiologically cleared for return to vessel.

B. Valuable articles.

All persons are warned not to bring personal articles ashore. If any valuable article, watch, ring, etc., is contaminated greater than 0.1 mr/hr above background, it will be put in a clean container and stored on CVE-115 until it may be radiologically cleared.

C. Radiac Instruments.

Upon return of radiac instruments to CVE-115, attention of the issue officer will be called to any contamination thereof.

D. Scientific Instruments and Materiel.

Less than 0.1 mr/hr gamma considered uncontaminated. For more heavily contaminated instruments, the Scientific Director will request CTG 7.6 for specific items to be cleared for removal to vessels of the Task Force. Otherwise, they will remain at the site.

E. Body.

Any person having any part of the body with a reading of greater than 0.1 mr/hr above background, Beta plus Gamma,

[redacted]

[redacted]

is considered contaminated. If washing at the site fails to reduce the reading below 0.1 mr/hr., then individual will be brought back to CVE for further washing to reduce reading below 0.1 mr/hr.

Any person having no part of the body with a reading greater than 0.1 mr/hr above background will be cleared for return to vessel.

III. Background Greater than 0.1 mr/hr. Gamma.

A. Disposable Clothing.

Treat all items worn in a contaminated area as if contaminated, and store in a cache ashore. Clean clothing will be supplied.

B. Valuable Articles.

Remove to location where background is less than 0.1 mr/hr Gamma and treat as in paragraph II.B.

C. Radiac Instruments.

Upon return of radiac instruments to CVE-115, attention of the issue officer will be called to any contamination thereof.

D. Scientific Instruments.

If urgently needed, remove to location where background is less than 0.1 mr/hr, Gamma and treat as in paragraph II.D.

E. Body.

Check all personnel as soon as a location is reached where the background is less than 0.1 mr/hr, Gamma, and treat as in paragraph II.E.

IV. Souveniers

No person will be allowed to collect souveniers of radioactive material.

[redacted]

[redacted]

TG7.6/acw

HEADQUARTERS
TASK GROUP 7.6
JOINT TASK FORCE SEVEN
U.S.S. BAIROKO (CVE-115)
Fleet Post Office
San Francisco, California

20 March 1948

RADSAFE FOUR

From: Commander, Task Group 7.6.
To : All Task Group Commanders.

Subject: Radiological Safety - Physical Examinations.

Reference: Annex J of Field Order #1 (Radiological Safety Plan).

1. Paragraph 4(f) of the reference requires that all personnel entering areas containing radioactivity or working with radioactive materials shall receive a complete physical examination including chest x-ray, blood count and urinalysis and that reports of such examinations shall be in the hands of the Radiological Safety Officer prior to departure from the United States. Such reports as have been received by the Task Force Radiological Safety Officer have been delivered to Commander Task Group 7.6 for review and recording. It is desired that reports which are late in submission be forwarded to Commander Task Group 7.6 direct who will ensure that they reach the hands of the Task Force Radiological Safety Officer as required.

2. A check of the records now on file indicates that reports of physical examination have not been received in the cases of certain persons who are believed to be subject to employment in radioactive areas. In many cases, the reports on file are incomplete and fail to indicate that the person successfully completed a physical examination. In other instances, the persons reported upon cannot be identified with their Task Groups or prospective assignments.

3. It is anticipated that a review of the reports, when received, will require re-examination of some personnel. It is therefore imperative that such reports be forwarded promptly. To expedite the work of checking these reports, it is requested that the eligibility lists required by paragraph 4(e) of the

APPENDIX "F"

[redacted]

UNCLASSIFIED

171

UNCLASSIFIED

[redacted]

TG7.6/acw 20 March 1948

Subject: Radiological Safety - Physical Examinations.

reference be submitted to Commander Task Group 7.6 at the earliest possible date, and that corrections be submitted two weeks prior to the test. The examination reports on hand will be checked against these eligibility lists and discrepancies will be reported by Commander Task Group 7.6 to the Task Group Commanders concerned. Eligibility lists should include full name, Task Group, and rank, grade or title. Individuals not yet present in the area should be indicated with probable date of arrival.

4. Personnel are considered to be ineligible for entry into radioactive areas or for working with radioactive materials until the requirements of paragraph 4(a) of the reference have been met.

FRANK I. WINANT, Jr.,
Commander, U.S. Navy,
Commander, Task Group 7.6

Copy to:
CJTF-7 (10)
CTU-7.6.9

[redacted]

UNCLASSIFIED

[redacted]

HEADQUARTERS
TASK GROUP 7.6
JOINT TASK FORCE SEVEN
U.S.S. BAIROKO (CVE-115)
Fleet Post Office
San Francisco, California

[redacted]

7 April 1948.

RADSAFE FIVE

From: Commander, Task Group 7.6.
To : Commanders, All Task Groups.

Subject: Radiological Safety - Light-proofing of goggle housings.

1. In accordance with paragraph 3, Section I, Appendix 2 to Annex J of Field Order Number 1, neutral density 4.5 protective goggles are being issued to the Task Groups.

2. The goggles as issued are not light tight because of ventilation holes in the rubber housings. In some instances it will be found that the goggle lenses are dislodged from their rubber sockets.

3. It is requested that necessary action be taken to insure that all goggles are made light-proof by:

(a) Covering the ventilation holes with friction, rubber or adhesive tape.
(b) Carefully fitting the goggle lenses into their rubber sockets.

4. Materials used to cover the ventilation holes should be removed prior to return of the goggles to Task Group 7.6 on completion of Operation SANDSTONE.

Frank I. WINANT, Jr.,
Commander, U.S. Navy,
Commander, Task Group 7.6.

Copy to:
CJTF-7

APPENDIX "G"

~~SECRET~~

URGENT

UNCLASSIFIED

[redacted]

APPENDIX "H"

U.S.S. BAIROKO (CVE 115)
c/o Fleet Post Office
San Francisco, California

3 May 1948

MEMORANDUM TO: Commander, Task Group 7.6, for LCDR D.C. CAMPBELL.

From: Adrian H. Dahl, U.S. Atomic Energy Commission.

Subject: Packaging and Shipping requirements for RadSafe Instruments

In accordance with oral requests from H. S. Allen and Major Dauer of the U.S.AEC and oral requests from Commander Andrews of JTG 7.6.4 the undersigned is herewith submitting recommendations for the packaging required for domestic shipment of Rad Safe instruments as well as the approximate number of instruments and their ultimate state-side destination. These recommendations are in the form of one attachment composed of an outline entitled "Packaging Requirements for Domestic Shipment of RadSafe Instruments" and a table entitled "Table I-Packaging and Destination of RadSafe Instruments".

The quantity of instruments involved in each case should correspond with the quantities received by TG 7.6. However, the undersigned does not have access to the correct list which is maintained in the Instrument Branch files at Oak Ridge.

In accordance with mutual agreements, the instruments and accessories should be packaged prior to arrival in Pearl Harbor or the ultimate state-side port, which ever is finally agreed upon. The responsibility for the instruments can be turned over to H.S. Allen or his duly authorized representative at anytime established in agreement with Mr. Allen. The transfer of accountability where applicable, will be accomplished by an Oak Ridge or Washington U.S. AEC representative shortly after arrival of material in the states. Mr. H.S. Allen, will make the final arrangements for shipment of material to Oak Ridge or Los Alamos as requested in Table I.

Please mark all packing containers clearly as to material included giving:

AEC Cat. Number.
Manufacturer
Manufacturers Model Number
Quantity in package

and the destination as given in Table I.

In addition it is requested that a summary report be prepared by yourself covering the close-out of your responsibility giving in particular

[redacted]

the material, with individual value over $25., which was not returned to the U.S. AEC and giving its location. This report should be brief and perhaps in a form similar to Table I,

This will include material used by Commander Andrews in the close-out of his work. Your report, or at least a copy thereof, should be sent to the undersigned.

Adrian H. Dahl,
Chief, Instrument Branch,
Division of Production,
U. S. Atomic Energy Commission.

cc: Walter J. Williams, U.S. AEC, Washington, D.C.
B. M. Finuff, U.S. AEC, Oak Ridge, Tenn.
Major M. Dauer, TG 7.1
H. S. Allen, U.S. AEC, TG 7.1
Adrian H. Dahl (2) TG 7.6.4

UNCLASSIFIED

[redacted]

PACKAGING REQUIREMENTS FOR DOMESTIC SHIPMENT OF RADSAFE INSTRUMENTS.

I - Gamma Pocket Dosimeters (AEC Category -PIC)

All gamma pocket dosimeters are designed to be rather rugged instruments. Therefore, shock protection is required only against external heavy blows and minor protection from accidental transportation drops of the package. Individual wrapping of each dosimeter in paper to prevent scratching of surfaces and one to two inches of soft packing between external dosimeters and the walls of container is all that is required. Size and destination of containers is given in Table I.

(a) All Beckman Dosimeters.
1. Wrap separately in two thickness of paper.
2. Package all units in one box, with units in contact except for separating paper. Place one inch of paper or packing material between outside of dosimeter and wall of container.

(b) Cambridge Dosimeters.
1. Separate good units from operational rejects in manner used during operation. Treat each group as individual groups, that is, pack good units in one container and rejects in an other container.
2. Package each group as outlined for Beckman dosimeters.

(c) Kelly Koett Dosimeters (all ranges).
1. Use same procedure as on Cambridge dosimeters.

II - Chargers for dosimeters.

Treat all types of chargers for dosimeters alike. First remove all batteries and pack batteries separately in container marked "Batteries for Dosimeter Chargers - Beckman Manufacture" (Kelly Koett or Cambridge as applicable). Separate each unit from the other by soft packing material of one (1) inch thickness. Place one inch of soft packing material between external parts of instruments and sides of container. Place two inches of soft packing on bottom and top of box between instrument and box sides. Size and destination of containers are given in Table I.

III - Survey Meters (AEC Categories SGM, SIC and SFC).

Treat all types of Survey Meters in the same manner. First remove all batteries and pack batteries in container marked, "Batteries for Survey Meter - AEC Number (SGM-4B)" corresponding to the related instrument. Tape corregated cardboard piece over face of indicating meter case. Tape switches in normal "OFF" position.

[redacted]

[redacted]

PACKAGING REQUIREMENTS FOR DOMESTIC SHIPMENT OF RADSAFE INSTRUMENTS
(CONT'D)

- -

Separate each instrument from the other by soft packing material of one inch thickness. Place one inch of soft packing material between external parts of instruments and sides of container. Place two inches of soft packing on bottom and top of box between instrument and box sides. Size and destination of containers are given in Table I.

IV - Laboratory Instruments (AEC categories CGL, CPC, LIC, LPC, etc.)

Treat all instrument of maximum size and weight of ten inches in any demension and fifteen pounds, respectively in the same manner as recommended for Survey Meters (Group III).

All instruments with demensions greater than that stated in the previous paragraph, should be limited to no more than 100 pounds of instruments packed per box or one instrument per box, whichever is larger. Two inches of soft packing must be placed around each instrument thus separating it from other instruments and container walls. Cover all glass meter faces with maximum demensions less than 5 inches with corregated cardboard protectors. All larger exposed glass surfaces are to be covered with ¼" thick wood boards to protect the glass from breakage. Corregated cardboard is to separate the wood from the case surroundings of the glass. Soft packing material is to be used between the protective wood board and the packing case wall in the same manner as stated for the remainder of the instrument. If any batteries are included in the instrument they are to be removed and packed separately in the same carton. Size and destination of containers are given in Table I.

V - Accessories to Laboratory Equipment.

This group of instruments includes lead shields, Recording Milliammeters, microscope, densitometers, dust collectors, chemical balances, etc.

Most of this group need no shock absorbing packing. Each unit should be placed in a separate wooden box or crate with unit mounted in place and container marked with proper side up.

The microscope and densitometers should be supplied with the proper packing boxes. The lead shields and Dust collectors will require preparation of proper crates.

[redacted]

The Recording Milliammeters and Chemical Balances shall be packed similar to that requested in the first paragraph in Section IV (Laboratory Instruments). Size and destination of containers are given in Table I.

VI - Test Equipment. (Primarily used in maintenance shops).

This group includes instruments such as oscillascopes, vacuum tube volt meters, standard volt-ohm-ammeters, etc.

Pack this group in that manner recommended in group IV (Laboratory Instruments). All material in this group is to be returned to Oak Ridge.

VII - Maintainence Shop Tools and Mechanical equipment and miscellaneous supplies.

No shock mounting required. Pack in wooden containers for ease of handling and pack as solidly as possible. Limit weight of each package to no more than 100 pounds. All material in this group is to be returned to Oak Ridge.

VIII - Spare Battery Kits.

No shock mounting required. Use containers already available in the Instrument Laboratory on board the U.S.S. BAIROKO.

Mark each box with proper designation such that batteries can be located for proper instrument, such as, "Batteries for SCM-4B". Send all batteries to Los Alamos.

IX - Spare parts kits.

No shock mounting required in audition to that already provided in presently available packing cases. All packing cases required are in the Instrument Laboratory of the U.S.S. BAIROKO. Mark each container as requested in Section VIII (Spare Battery Kits). Send all spare parts kits to Los Alamos.

[redacted]

TABLE I - Packaging and Destination of Radsafe Instruments

AEC Cat. No.	Manu-facturer	MFG. MOD. NO.	Quant.	Containers No.	Length	Width	Depth	Ship To:
Group I - Gamma Pocket Dosimeters								
Good Units								
PIC-7A	Keleket	K-100	500	1	24	20	10	Los Alamos
PIC-7B	"	K-150	80	1	12	12	10	" "
PIC-7C	"	K-160	20	Pack with PIC-7B				" "
Defective Units								
PIC-7A	Keleket	K-100	100	-	-	-	-	Oak Ridge
PIC-7B	"	K-150	30	1	12	12	10	" "
PIC-7C	"	K-160	5	-	-	-	-	" "
Good Units								
PIC-9A	Cambridge	-	100	1	12	12	10	Los Alamos
Defective Units								
PIC-9A	Cambridge	-	100	1	12	12	10	Oak Ridge
All PIC-11A	Beckman	-	50	1	10	5	5	Oak Ridge
All PIC-12A	Beckman	MX-7	26	1*	25	16	6	Los Alamos
Group II - Chargers for Dosimeters								
AV-2B	Keleket	K-125	67	1	24"	20"	14"	Los Alamos
AV-7A	Cambridge	17609	20	2	24"	20"	14"	" "
AV-7	Beckman	-	5	1	12"	12"	10"	Oak Ridge
Group III - Survey Meters								
SGM-2B	Victoreen	263A	100	10	30"	24"	18"	Los Alamos
SGM-4A	Inst.Div.Lab.	2610	25	4	42"	14"	10"	" "
SGM-15A	Ntl.Tech.Lab.	MX-5	25	2	24"	20"	16"	" "
SIC-2A	Victoreen	356	20	3	24"	20"	14"	" "
SIC-3B	Rauland	Z-100A	20	3	42"	14"	10"	" "
SIC-3C	"	Z-100	20	2	42"	14"	10"	" "
SIC-9A	Victoreen	247	12	2	24"	24"	12"	Oak Ridge
SIC-9B	"	247A	50	9	20"	24"	16"	Los Alamos
SIC-9C	"	247A(rd)	10	1	20"	24"	16"	" "
SIC-11A	N.T.L.	MX-2	10	2	42"	14"	10"	" "
SIC-15A	N.T.L.	MX-6	20	2	24"	20"	16"	" "

[redacted]

[redacted]

TABLE I (CONT'D)

AEC Cat. No.	Manu-facturer	MFG. MOD. NO.	Quant.	Containers No.	Length	Width	Depth	Ship To:
Group III - Survey Meters (Cont'd)								
SFC - ?	Los Alamos	Peewee	2	None	(return to AEC ship prior to departure).			
SIC - ?	" "	Watts Meter	2	"	"	"	"	").
SIM - ?	Sylvania (Navy)	AN/PDR -1 & 8	16	4	24"	20"	16"	Navy Dept.
SDM -	RCA (Navy)	PDR-11	2	Pack with PDR-1 and 8				Navy Dept.
Group IV - Laboratory Instrument								
CGM-3G	I.D.L.	161-G	2	2	24"	20"	14"	Oak Ridge
MTM-	Gen. Radio	1500A	2	2	24"	20"	14"	" "
MIC-4A	Victoreen	300	20	2	24"	20"	16"	Los Alamos
CPC-2C Methane flow proportional counter)	I.D.L.	117	1	1	24"	20"	14"	Oak Ridge
Group V - Accessories to Laboratory equipment.								
L-10A (lead shields)	Designers for Industry	None	2	2	16"	12"	12"	Oak Ridge
AM-? Recording Milliammeter 5 ma.)	Esterline Angus	AW-1	2	1	24"	20"	14"	" "
None (Microscope)	Spencer	-	1	1	16"	12"	12"	" "
AC-2A (Dust Collector)	M.S.A. Co.	None	6	3	24"	22"	16"	" "
AD-4A (Densitometer)	Weston	?	4	Boxes prepared by photo lab.				
None (Chemical Balance)	One for milligrams and one for grams.		2	1	24"	22"	11"	" "
				1	20"	16"	12"	" "
Group VI - Test Equipment (Preliminary used in Maintenance shops)								
Oscilloscopes	Dumont - 208B & 164E		4	2	24"	20"	16"	" "
Vacuum tube Volt meters	X 4	R.C..	664	1	24"	20"	16"	" "

[redacted]

TABLE I (CONT'D)

AEC Cat. No.	Manu-facturer	MFG. MOD. NO.	Quant.	Containers No.	Length	Width	Depth	Ship To:
Group VI - (Cont'd)								
Volt - Ohms Ammeters	Simpson	260	10	Pack with R.C.P. V.T.V.				
Other Instruments				1	24"	20"	16"	Oak Ridge
Group VII - Maintenance Shop Tools								
Ten sets of tool kits plus other miscellaneous items				2	24"	20"	16"	" "
Group VIII - Spare Battery Kits								
Use boxes that are already holding batteries in storage 10 to 20 box containers will be involved.								Los Alamos
Group IX - Spare Parts Kits								
Use boxes that are already holding spare parts in storage 10 to 20 box containers will be involved.								Los Alamos

[redacted]

UNCLASSIFIED

TASK GROUP 7.6 OPERATIONAL REPORT

ANNEXES

ANNEX I	Notes on Operations.
ANNEX II	Photographic Activities.
ANNEX III	Requirements For Future Atomic Tests - Radiological Safety Group.
ANNEX IV	Pertinent Dispatches.
ANNEX V	Radiological Status Report

[redacted]

[redacted]

ANNEX I

Notes on Operations

Aerial Crater Survey-RadSafe Party No. 1

The C-47 with monitor took off from Eniwetok 30 minutes following the test. Northeast of the zero island and upwind, it encountered a small amount of fallout almost at once, but proceeded on its mission at 5,000 ft. with a background of 4 mr/hr. Phase one consisted of flights over the crater at various altitudes in order to determine the radiation intensity above the crater. It was flown at heights up to 5,000 ft. During this survey, readings were radioed in code to the USS MT MCKINLEY whenever the plane crossed an active area, Phase III included a check of the islands to the west of the test island at an altitude of 200 feet. Readings of 500 mr/hr were obtained over the three islands immediately to the west, indicating extensive fall-out on these islands. Phase II, a check of the air over the crater at 5,000 to 10,000 feet elevation, was then begun but the intensity at 8,000 feet indicated negligible radiation.

A further survey was made on X-RAY-plus 1, followed by a recheck on X-RAY-plus 6, at which time the ground monitors were also surveying the crater. Final analysis of these data is awaiting study of the decay curves, but it appears that excellent results were obtained.

Evidence of fall-out on the islands adjacent to the test island was later confirmed by the ground survey.

Eniwetok Island - RadSafe Party No. 2

The radsafe party in Eniwetok Island consisted of Captain Mallory and two assistants. The first members of this party arrived on Eniwetok Island, 30 March. A radiological safety center was established in the radiochemistry laboratory. This location was in close proximity to the drone parking area and proved to be ideal for the mission at hand. A TCS radio was installed by the Island Commander's communications office and continual watch was kept on this circuit with the RadSafe Center on the MT MCKINLEY and Radops on the BAIROKO. Complete rehearsals were held on PETER X-RAY Day with the drone landings and it was estimated that two monitors could handle the filter removal operation.

At 0725 following the shot the first drone plane landed. The drone planes were not parked together. This caused some confusion and it was very difficult for the monitors to keep in contact with all the personnel involved. However, by 1000 the top filters were unloaded and on their way to the states. None of the personnel involved received the tolerance limit of 3 r on this mission. After all of the filters were removed it was apparent that the air personnel could remove their data from the drones, as well as the film badges without exceeding the 0.1 r for a routine mission.

[redacted]

[redacted]

Washing down and decontamination of the drones was accomplished by the air monitors. The washing was completed by the morning of X RAY-plus 3.

Some slight fall-out was observed about 2100 of X-RAY Day. No activity was observed in any of the salt or well water intakes. By X-RAY-plus 3 the island and swimming beaches were cleared and by X-RAY-plus 5 the drones were cleared for flight to Kwajalein.

Tank-LCM Operations - Radsafe Party No. 6

The purpose of the Tank-LCM operation was to procure a soil sample from the crater at the point of detonation of the atomic weapon. A tank revetment was built on each of the test islands located as far as possible from the zero point. In this revetment the chassis of a light tank, brilliantly painted for easy visibility, was concealed at the time of the test. It was equipped with remote controls which permitted the vehicle to move either right, left, or forward. It was also fitted with a scoop in front for the purpose of lifting up a sample of the soil. When obtained this sample was divided into two parts, the smaller part was taken to the laboratory on board the USS BAIROKO, and the other to Eniwetok where it was loaded on aircraft and flown to the Los Alamos laboratories in the United States.

The tank was operated by remote control from a helicopter, after its operation had been checked by a ground operator, and it was guided by this means to the crater and return. If, for any reason, the helicopter and its standby lost control, the tank operation could be taken over by an auxillary set of control equipment in the LCM which brought the party to the island. The LCM also carried an additional tank for use if the first tank failed.

The monitors assigned to this mission on X-Ray Day were LCDR Vandergrift and LT. Woy. Dr. Bowman, who was in charge of the mission, and Mr. Stanley, his assistant, remained behind on Eniwetok completing the drone filter removal, as the Tank LCM took off for the test island. The LCM picked up the monitors from the BAIROKO and beached at the lower end of the island not far from the Tank Revetment. No damage had been done to the tank by the blast other than loss of the antenna. This was replaced, the tank was started and driven out of the revetment to await the arrival of Dr. Bowman and Mr. Stanley by helicopter. Upon his arrival at 1110, the tank controlling helicopter was called from the BAIROKO, and Dr. Bowman accompanied by LCDR Vandergrift proceeded by jeep to lay out the flag markers, beyond which it would be unsafe for the tank controlling helicopter to fly.

The tank performed well, and made two runs with samples which were considered too low in intensity. On the third attempt the tank was stalled in the crater and could not be moved by remote control. The reserve tank could not be used because it was now minus its radio antenna which it had sacrificed for the first tank.

[redacted]

[redacted]

The first sample was taken for study, and divided. The first part arrived with LCDR Vandergrift at the BAIROKO at 1330, and the second arrived at Eniwetok with Lt. Noy by 1740. The party became contaminated to some extent and arrangements were made to clear this party at Eniwetok.

The tank control operator was subject to some exposure, and to protect this operation a second helicopter containing a monitor was dispatched to accompany and remain forward of the operating plane.

Helicopter Operation - Radsafe Party No. 7

This mission consisted of the dispatch by helicopter, of members of the LAJ-3 group to the land cable on the test island, in order to assist in the recovery of samples. It was essential that certain of the samples on the land cable be recovered as quickly as possible in order to take proper technical measurements. Winding the cable on to the drum of the winch took considerable time, and starting the drum promptly saved time for theAVR party which later came to the island to complete the collection of the samples.

A monitor was sent as monitor for this party to accompany Dr. Ogle and his assistants. The duties of the monitor included the clearing of the landing for the other helicopters, standing by while the winch was started, going forward along the cable in a jeep with Dr. Ogle to recover samples near the zero point and later opening up the cache and starting the radio communication.

Three helicopters were used. It was found after X-RAY Day that the operation would be facilitated if six men were sent in on this operation, accompanied by two monitors, and this procedure was followed on succeeding tests.

On X-RAY Day, a monitor cleared the landing of the other planes, and went to the cache where he found the door blown in and the radio inoperable. Several of the samples were missing from the cable as it was wound in, and Dr. Ogle with the monitor went forward to locate these samples. The mission was accomplished in less than two hours with very low exposure (200 mr) to all personnel. The monitor then returned to the AVR and accompanied an unscheduled water cable party. No samples were found either afloat or on the bottom of the lagoon, as far as could be seen. Since the party went quite close to the zero point in the water, considerably more exposure was the result. However, the total received was well within the tolerance established. More of the missing samples were recovered in later trips to the island.

Strategic Plot Center

STRATEGIC PLOT maintained a fall-out chart of the lagoon, and nearby atolls of Kwajalein and Ujelang. The Eniwetok atoll chart was kept up

[redacted]

to date as reports came in and an iso-intensity line of 0.1 r per day in the lagoon water was also plotted on this chart.

The surface and air radexes were plotted daily from weather data obtained from Aerology. Utilizing a vector analysis of the wind velocities, fall-out patterns for the surface, 15,000, 20,000, 25,000 and 30,000 feet were determined. These patterns were plotted on charts with a superimposed polar grid. From the fall-out patterns, the surface radex, given as two bearings from zero point, and also recommendations as to the direction of the third pass for each drone plane mother were determined.

Definite criteria were used to determine whether or not the day was operational from a radiological safety viewpoint. If the fall-out from 45,000 feet or below, did not extend between 90°T or 170°T from zero point, the day was considered operational. If the fall-out from 45,000 feet fell on the bearing of Eniwetok-Parry islands (150°-160°) the day was considered questionable with moderate hazard. If the fall-out from 35,000 feet or below fell on these islands, the day was considered non-operational.

Three days preceding the test a forecast for a test day was made, and on the day before the test day the latest weather forecast was presented at 1800. Actual wind data was plotted at intervals from this time to 0300 at which time the last baloon sounding was made and the data was prepared for the briefing.

X-RAY Plus Two - YOKE Test

Considerable radioactivity was found on the islands west of the test island, indicating extensive fall-out. Evidences of fall-out elsewhere were slight. A consolidated report was prepared and all the evidences of fall-out noted during the days following the test.

On X-RAY-plus 5, Commander Task Group 7.6 sent a report to Commander Joint Task Force 7 stating that the survey of all the perimeter islands had been completed, and recommended that long term closure of the islands from Yeiri westward to the southwest passage inclusive be instituted because of the radioactivity discovered along the beaches and the evidences of fall-out. The temporary clearance of the other islands and of the lagoon beaches on these islands for swimming was recommended.

Dust collectors had been set up on each of the principal ships of the Task Force, and were examined daily, together with a careful check of the evaporators.

Several surveys were made on the test island and the gradual retreat of the iso-intensity lines was plotted in Radop.

On the fifth day after the test, a guard of two monitors each morning and afternoon was set up on the test island, and the Beach Radsafe Center established. This made the island more accessible to the engineers who were to work on the portion where the intensity of radiation was now below tolerance limits. It considerably reduced the monitor demand on Task Group 7.6, and at the same time insured a closer watch on the many parties that had mission on the test island.

The bogged tank was recovered from the crater, and work was begun by the engineers to destroy the remains of the test structures on the island in order to prevent any unauthorized persons from obtaining any information on the effects of the tests.

On X-RAY-plus 9 the USS BAIROKO shifted its anchorage to a location off the test island for YOKE Day, and final preparations for YOKE test were well underway. Two days later the island of X-RAY test was closed to all personnel.

Preparation for YOKE Test

Installation of stakes, and the painting of numbers on various structures of the test island facilitated island surveys. Three stakes at hundred yard intervals were placed on the island immediately to the north of the zero point for use in any surveys that might be made in this direction. The stakes on the test islands were not located on a systematic radial manner from the zero point as was the case in test X-RAY, because the engineer structures were located in a cleared strip extending along the lagoon side of the islands and about 300 yards wide. It was planned to ignore, for all practical purposes, the extensive palm grove on the portion of the island toward the ocean, and which was expected to become a mass of tangled rubble as a result of the test. All of the island survey monitors were throughly briefed.

Because of the evidence of fall-out from the X-RAY test, it was decided by higher authority to maintain monitors on the destroyer patrols until YOKE-plus 4. Accordingly a monitor was assigned to each of following destroyers:

USS TUCKER (DDR 875)
USS SPANGLER (DE 696)
USS GEORGE (DE 697)

YOKE Day

A huge cloud resulting from the explosion of the atomic weapon was still plainly evident thousands of feet above the zero island when the four helicopters came in on the southern tip of the island for a landing. The landing was made about twenty minutes after H hour. Major Cook in a jeep with Dr. Ogle and Mr. Linnenberger went along the land cable to assist in recovering the samples at various points along it. Major Sheppard

stayed with the remainder of the party in the vicinity of the winch. All but 100 yards of the cable was recovered with all of the samples except two of the multiple samples. The winch and cable remained cool (50 mr) during more than half of the operation, and then began to get rapidly higher intensities until it reached 15,000 mr at six inches. A piece of metal, supposedly a link from the tower cable was found near the winch testing higher than 5,000 mr. This material was removed to a safe distance from the operation. Major Cook crossed the causeway with Dr. Ogle, approaching the zero point to a reading of 20,000 mr/hr and returned. The mission was entirely successful, all members of the party taking proper precautions in handling the samples with gloves and tongs, and no overexposures were obtained.

Major McDonnel's party landed about twenty minutes behind the helicopters, beaching on the island by an LCVP that had been picked up by the AVR. The missions at Gamma "A" and Gamma "B" station were completed satisfactorily although at Gamma "A" station the roller tracks were wedged and the party at this station received some contamination on their clothing while forcing an entrance. A camera placed on the causeway was recovered. All of the personnel returned on the AVR 38, and were checked for contamination on boarding the USS BAIROKO. Meanwhile the samples had been flown by helicopter to the laboratories on the USS ALBEMARLE for final analyses. The entire operation was completed earlier and more efficiently than in test X-RAY.

Following the test, the USS BAIROKO weighed anchor and was proceeding slowly to its anchorage off the test island, preceded by four boats patrolling the lagoon waters ahead of the ship. Two other boats preceded the rest of the JTF 7 fleet to their anchorage off the island to be used for test ZEBRA. These boats were tracked and plotted by radar and the readings of radiation intensities in the water were transmitted in code to the Radsafe Center and to Radops on the BAIROKO. Iso-intensity lines of water contamination in the lagoon between the anchorage and the test islands were plotted for the information of the Task Force Radiological Safety Officer.

The background count of radioactivity on the bridge of the USS BAIROKO began to raise noticeably immediately following the test, but the amount was not alarming and it was decided not to change the anchorage. This increase in background was also observed at the same time on Parry Island, and was probably a wide-spread phenomenon.

The survey of the test crater from the air was begun by LCDR King in a C-47, but he was forced to turn back when his plane received so much fall-out from the cloud that the readings in the plane began exceeding the daily tolerance.

At H-plus 3 hours two monitors boarded the Tank LCM as it came by the BAIROKO and proceeded to the zero island to await Dr. Bowman who was to fly to the island by helicopter after supervising the removal of filters from the drone planes at Eniwetok. Dr. Bowman arrived at 1050, and flags were placed at the center of the causeway marking the limit of safety for the tank controlling helicopter. The helicopter in which the tank operator, was riding was forced down by engine trouble on another island, and caused some delay before he could be flown in for the operation. At 1130 the operation was ready. The tank that had been stationed in the revetment during the test was driven manually to the causeway, and from thence proceeded under remote control operation to the crater formed by the test weapon. The tank soon became bogged down, and efforts to get it started again were unavailing. The reserve tank that had been brought up in the LCM was then sent in and successfully obtained a soil sample from the desired point, returning to the uncontaminated end of the island. This soil sample was divided, a small portion being sent to the laboratories on the USS BAIROKO, and the remainder being taken to Eniwetok by one of the monitors. This latter sample reached Eniwetok by 1510 and was dispatched by air to laboratories in the United States.

During this entire operation a standby helicopter with a monitor took up a position near the tank controlling helicopter, in order to insure that the latter would not be overexposed to radioactivity. When this plane landed to investigate the trouble with the tank, the monitor in the other helicopter checked most of the island at an altitude of 500 feet, except that portion in the vicinity of the zero point.

The evaporators on the BAIROKO and on the MT MCKINLEY were checked for radioactivity and found satisfactory.

YOKE Plus Two Day

The northeast perimeter survey of the islands left the BAIROKO at 0930 in two dukws. Extensive evidence of fall-out was found on all the islands of this section. A detailed survey was impracticable within the restrictions of a routine mission, and readings had to be taken while moving rapidly along the beaches in the dukws. Only half of the islands planned for survey could be covered before tolerance doses had been received by all personnel. Some evidence of water contamination was observed, and all results were reported in detail to Radops where a complete fall-out report was prepared.

At about 1000 hours the background on the flight deck and hanger deck of the USS BAIROKO began to noticeably increase, and it shortly became evident that appreciable fall-out was occuring on the ship. About the same time, it was reported that fall-out had occured on Kwajalein., and steps were taken to fly water samples to the laboratories on the BAIROKO for study. The maximum reading recorded on the BAIROKO was 1.7 mr/hr. Hourly samples of filter papers from the dust collectors were taken

throughout the day, and studies of beta count made in the laboratory, a cascade impactor was operated at the same time. Early in the afternoon fall-out appeared to have ceased but it caused considerable trouble for the deck monitors in their examination of equipment and clothing of parties returning from the test areas. The water samples from Kwajalein did not reveal any harmful contamination. No contamination was detected in the showers of rain that fell through the day. Fall-out was also detected on other ships of the Task Force, but to a lesser extent than on the BAIROKO. Negligible contamination was found in the evaporators which were being checked daily.

YOKE Plus Three Day to ZEBRA Test

The contamination of the lagoon waters had reached an insignificant figure by YOKE-plus 3 day, and further survey of the lagoon anchorage, other than an occasional spot check, was discontinued. The islands of Runit, Parry and Eniwetok were cleared for swimming and recreation parties.

The island immediately north of the test island was heavily contaminated from fall-out, and also received considerable radiation from the crater. Stakes had been planted on this island prior to the test to assist in the survey, but none of them could be found after the blast. The extensive palm grove on the island had been completely destroyed.

Monitor guards were established on YOKE-plus 4, and maintained continuously until the island was closed just prior to ZEBRA test. Their presence considerably facilitated the work of the engineers in clearing evidence of blast effects from the island.

Samples of water obtained from Kwajalein, and other neighboring island groups, where fall-out occurred or where there had been a possibility of fall-out, were checked and found safe for human consumption.

The island of YOKE test was closed and declared a restricted area on YOKE-plus 11. Reconnaisance on the island of ZEBRA test, and the survey of lagoon currents off this island had already begun.

ZEBRA Test

A large area of fall-out was observed from the air extending out into the lagoon on an azimuth of 280° from the zero point. This area was confirmed by boat patrol and its course plotted until it was assured that it was not a source of danger to the ships of the task force.

Radsafe Party No. 4 ran into considerable difficulty on their mission, because snagging of the land cable made it impossible to wind the samples in to a safe area where they could be conveniently handled. The importance of obtaining these samples made it necessary to pick them up by jeep, which exposed the party to considerably greater radioactivity than had been met on

previous missions. Rotation of the working personnel resulted in getting the most work accomplished within the exposure allowed, and this reassignment was made smoothly and without confusion.

Considerable fall-out on the islands north of the test island was observed by the C-47 plane survey and later confirmed by ground measurements. Fall-out was also received on the photo tower and on Eniwetok, but it rapidly decayed and never approached the tolerance limit.

On the LCM Tank Mission, Radsafe Party No. 6, the first tank became stalled near the zero point, but the reserve tank successfully obtained the desired samples.

In the operations on Eniwetok Island, it was found that the drone planes showed evidence of much higher exposures than on the previous tests. The top filter boxes were removed from the drones, but it was considered more efficient in the case of the bottom filter boxes to remove the filter paper holders without removing the boxes from the planes. Gloves and 18" tongs were used for this operation, although a stapling machine was used to mark the papers. The monitors kept the handling personnel advised of the intensities at all times. During the stapling operation, it was realized that the personnel were near tolerance, but, as no relief personnel were available and a halt in the operation would have caused a serious delay, the workers continued to work until the papers were loaded on planes and on their way to the ZI. It was recommended that more remote methods of handling filters for future tests be devised.

On ZEBRA-plus 3 days all of the ships of the task force in the lagoon were inspected by monitoring parties. These groups paid particular attention to the blower intake screens, the open decks, the ship's boats, the evaporators, the auxiliary condensers and any cargo that the ship happened to have on board.

All monitoring operations ceased after ZEBRA-plus 5, and the test island was declared closed. Captain Mallory was assigned to remain at Eniwetok Island until relieved by the permanently assigned garrison monitor.

Monitor Schedules.

Copies of Monitor Schedules for Operation SANDSTONE are appended to this ANNEX as Appendix (1).

UNCLASSIFIED

[redacted]

Appendix (1)

OPERATIONS SCHEDULE FOR X-3 DAY AND EARLIER

RADSAFE PARTY NO.	TIME	MONITORS	TRANS.	MISSION NO.	OPERATION
10	FX-4	Lt Babcock	LST 219	B	To Ujelang with LST 219 as monitor. To return by plane via Kwajalein on X+2.
19	X-7	CETM Madomann	ATC Plane	A	To Kwajalein as instrument repairman - Remain until X+7.
15	X-4	Capt Gaines Ens Ashley	ATC Plane	C	To Kwajalein as PBM monitors. To Eniwetok on X+1 via shuttle plane.
12	1200 X-3	LtCdr Olivari (DDR-875)	LCI (Ferry ABLE)	D	To Gardiner's Bay for transfer to U.S.S. TUCKER as DD monitor. To return on X+1.
12	1200 X-3	Maj Mather (DE-696)	LCI (Ferry ABLE)	E	To Gardiner's Bay for transfer to U.S.S. SPRINGER as DD monitor. To return on X+1.
12	1200 X-3	Dr Morton (DE-697)	LCI (Ferry ABLE)	F	To Gardiner's Bay for transfer to U.S.S. GEORGE as DD monitor. To return on X+1.
20	Daily at 0945 prior to X-2	Capt Kimbel Lt O'Leary Lt Barth Dr Nolan CY Harmon	CVE-Boat	G	To man RadSafe Center on AGC-7. Remain on AGC-7 after X-2.

-1-

[redacted]

UNCLASSIFIED

[redacted]

OPERATIONS SCHEDULE FOR X-2 DAY

RADSAFE PARTY NO.	TIME	MONITORS	TRANS.	MISSION NO.	OPERATION
19	0800	Cdr Langer Dr Andrews & assts.		H	To AGC-7, AV-4, AV-5 and CVE-115 to service filter queens.
	0600	Maj. Sheppard	CIC DUKW	HA	Place badges on down wind islands
19	0700- 1700	Dr Scoville Capt Dreeger Cdr Andrews Cdr Hoffman Cdr Langer Mr Seigel Lt Vicars GMM Johns SP3 Pearson LtCdr Erickson	LCVP (HARIKARI)	I	To Zero island to prepare Test equipment for detonation.
19	0900	Lt Pierce, Mr Murphy	LCVP (HARIKARI)	J	To test LCVP (DEAD DUCK) and return.
[redacted]	1300	[redacted]	LCM (DAINTICH)	K	Via LCM to Eniwetok and various monitor missions during test.
2		Capt Mallory 1ST/SGT Mason M/SGT Daugherty			Upon arrival of LCM at Eniwetok LCM to report to boat pool and boat crew to U.S.S. COLSTOCK.
9 24 16		LtCdr Eldredge Lt Speicher Capt Franks			LCM delivers Lt Speicher U.S.S PICKAWAY, APA-222.
9	1400	R.M. Hal Lt Woods	PPB	L	To AV-5 as topside monitor
22	1430	VIPs	LCI & PPB	M	VIPs arrive Engebi via LCI and are transferred to CVE.
19	1900	LtCol Houghton Maj McDonnel	PPB (BULSTRAD)	N	To AV-4 to spend night and participate as disaster party in X-1 operations.

[redacted]

UNCLASSIFIED

[redacted]

OPERATIONS SCHEDULE FOR X-1 DAY

RADSAFE PARTY NO.	TIME	MONITORS	TRANS.	MISSION NO.	OPERATION
18	0530	LtCol Houghton Maj McDonnel	AV-4 Boat	O	Houghton and McDonnel from AV-4 to ZERO island. Proceed to tank revetment and remain there until 1200. TG 7.6 truck will be available for their use.
19 ~~21~~	0800	Capt Draeger Cdr Andrews Cdr Hoffman Mr Seigel Lt Vicars CPHC Johns	LCVP (JOIST)	P	T.U. 7.6.6 party to ZERO island Place film badges, biological samples and start collective protector.
22	0830-1100	VIPs	PPB (BUMSTEAD)	Q	To AGC-7 for VIP briefing
19	0830	Dr Scoville Dr. Nolan	PPB (BUMSTEAD)	R	To AGC-7 to join RadSafe Center and remain after detonation.
~~21~~	~~0900~~	~~Lt Pierce~~ ~~Mr Murphy~~	~~LCVP (JOIST)~~	~~S~~	~~To test LCVP (DEAD DUCK) to start collective protector.~~
	1030	Cdr Winant	PPB (BUMSTEAD)	T	To AGC-7 to attend staff conference.
~~21~~	~~1045~~	~~Lt Pierce~~ ~~Mr Murphy~~	~~PPB (BUMSTEAD)~~	~~U~~	~~To test LCVP (DEAD DUCK). To pick up Pierce and Murphy and return to CVE.~~

[redacted]

UNCLASSIFIED

UNCLASSIFIED

[redacted]

OPERATIONS SCHEDULE FOR X-1 DAY (CONT'D)

RADIOLOGICAL PARTY NO.	TIME	MONITORS	TRANSPORTATION	MISSION NO.	OPERATION
4	1130	Maj Cook Maj Rossano Capt Bolen M/SGT Hermansen Maj Goodsell Lt Cullen	PPS (SUNSTRAND)	V	Monitor party from CVE to Zero Island personnel landing to await departure DOT 1345.
3 5	1145	Capt Dreager Cdr Hoffman Cdr Andrews Mr Seigel Lt Vickers CPhM Johns LtCol Houghton TG 7.6 Jeep	LCVP (VOIGT)	X	Returns TG 7.6.6 party to CVE with Houghton from director party. Jeep placed on LCVP prior to 1100. On return LCVP and jeep brought aboard CVE.
12	1300	Cdr Vincent	PPS (SUNSTR.	Y	Returns Vincent from staff conference on DOT-7 to CVE. On return PPS brought aboard CVE.
4	1300	Maj McDonnel Maj Cook Maj Rossano Capt Bolen M/SGT Hermansen Maj Goodsell Lt Cullen	DOT 1345	Z	Monitor party boards DOT 1345 from Zero Island and proceeds to Perry Island and various monitor missions.
3 5					
1	[illegible]	LtCdr King	ATC C-47	A.	Arrives Eniwetok from Kwajalein to remain after detonation as C-47 radsafe survey plane monitor.

[redacted]

UNCLASSIFIED

SECRET

OPERATIONS SCHEDULE FOR X DAY

PLACE Perry Is.	TIME	MONITORS	TRANS.	MISSION NO.	OPERATION
4	0400	Maj McDonnel Maj Rossano Maj Cook Capt Bolen M/SGT Hermanson	AVR-38	AB	Board AVR-38 on return of this boat to Perry Island.
5	0400	LtJG Cullen	AVR-53	AC	Board AVR-53 on return of this boat to Perry Island. Remain on board for air/sea rescue.
	H (approximate time of detonation)				
4	H plus 10 min.	Maj McDonnel Maj Rossano Maj Cook Capt Bolen M/SGT Hermanson	AVR-38	AD	Leave Perry Island for ZERO Island. Arrival about 0600.
				AE	M/SGT Hermanson remains aboard AVR-38.
				AF	Monitor 1st cable winch.
				AG	Monitor operation at Shame stations. 3 & 4.
	1010	Maj. Rossano	AL-5-boat		Returns to recover more samples from land cables

SECRET

UNCLASSIFIED

S-E-C-R-E-T

[redacted]

OPERATIONS SCHEDULE X-DAY (Cont'd)

RADSAFE PARTY NO	TIME	MONITORS	BOAT	MISSION NO.	OPERATION	PRIORITY
7	H plus 10 min.	M/Sgt Long	Heli-copter	AH	In helicopter to take-off from CVE and land on Zero Island near winch at 0540.	U
				AI	Long clears landing of other two.	
				AJ	If possible check radio operation of Dalmation, monitor for land cable party. Return to CVE-115 by AIR #38.	
17	H plus 10 min.	Mr. Ogle (TG 7.1)	Heli-copter	AK	From CVE to water cable for recovery.	U
2	H to H plus 3 hr.	Capt Mallory M/Sgt Daugherty 1st/Sgt Mason [redacted]	None	AL	Monitor drone planes upon landing at Eniwetok. Filter units removed and disposed of by LAJ-2 personnel. Clear island.	U
				AM	Watch for fall-out.	
1	H plus 30 min.	LCdr King	C-47	AN	C-47 mission starts aerial survey on orders of Commander Air Forces. (Big Ben)	R
8	H plus 20 min.	LCdr Aldredge	Photo. boat	AO	Leave Eniwetok for Coral Head Photo Tower to assist in recovery of film and return to Eniwetok.	U

[redacted]

UNCLASSIFIED

SECRET

S-e-c-r-e-t

OPERATIONS SCHEDULE (Contd)

RADSAFE PARTY NO.	TIME	MONITORS	BOAT	MISSION NO.	OPERATION	PRIORITY
17	H plus 1 hr.	Mr. Ogle (TG 7.1)	Helicopter	AP	Leaves from area of Zero Is. with water cable samples to AV-5. Leaves samples and returns to CV-115.	U
6	H plus 3 hr.	LCdr Vandergrift Lt Woy	LCM (Tank)	AQ	From CTZ [redacted] and proceed to Zero Island. LCM beaches near tank revetment.	U
			(AmC Boat)	AR	LCdr Vandergrift returns to CVa by boat with crater sample to CV-115.	
				AS	Lt Woy returns with crater samples to Eniwetok.	
				AT	After samples are placed in storage at Eniwetok Lt Woy returns to CVa.	
25	H plus 3 hr.	LCdr Carr		AU	Monitor in second helicopter monitoring for tank guiding helicopter.	U
9	H plus 1 to H plus 4	Lt Woods		AV	Monitor landing by helicopter of samples from Zero Island on AV-5.	U
11	H plus 1 and later	Capt Steed		AW	Monitor returning helicopters, personnel, and land samples on CVa.	R

SECRET

UNCLASSIFIED

[redacted]

OPERATIONS SCHEDULE X-DAY (Cont'd)

RADSAFE PARTY NO.	TIME	MONITORS	BOAT	MISSION NO.	OPERATION	PRIORITY
16	H plus 20 min.	Capt Franks	L-5	AX	Surveys Aoman, Biijiri and Runit by L-5 from Eniwetok. L-5 in company recovers technical films from Aoman Photo Tower.	U
21	H plus 3 hr.	Maj. Cook ~~[illegible]~~	CVE115 boat	AY	Goes aboard LCT 472 as monitor off Engebi remains over night or until relieved.	R
	1410	Lt. Vicars	Marikari		To Muzin & Karenian to recover film badges	
13	When directed by CTG 7.6	Cdr Smith	Bumstead	AZ	Lagoon re-entry patrol to debark and precede CVE-115 into lagoon until anchored and then patrol anchorage, and collect water sample.	R
14	"	Lt Pierce Lt Col Houghton	Joist	BA	" " "	R
				BB	Place filter queen in operation near Gamma B station. (H plus 7).	
4	H plus 4	Maj McDonnel Maj Rossano Capt Bolen M/Sgt Hermanson 1st/Sgt Long	AVR #38	BC	Returns to CVE via AV-5.	
				BD	M/Sgt Hermanson remains aboard AVR #38 and accompanies it for air/sea rescue.	
23	H plus 6½	Lt Phillips	AV-5 Boat	BE	LAJ-4 Mission	U
~~4~~	~~H plus 8½~~	~~Capt Bolen~~	~~AV-5 Boat~~	~~BF~~	~~LAJ-5 Mission~~	U

[redacted]

UNCLASSIFIED

[redacted]

OPERATIONS SCHEDULE X-DAY (Cont'd)

RADSAFE PARTY NO.	TIME	MONITORS	BOAT	MISSION NO.	OPERATION	PRIORITY
23	H plus 8	Lt Phillips	AV-5 Boat	BG	Return to CVE from LAJ-4 mission to zero island.	
~~4~~	~~H plus 10~~	~~Capt Bolen~~	~~AV-5 Boat~~	~~BH~~	~~Return to CVE from LAJ-5 mission to zero island.~~	
9	1600	Lt Woods	CVE Boat	BI	Returns to CVE from AV-5.	
16	1400	Capt Franks	L-5	BJ	Re-checks Aomen and Runit.	
8 16	1600	LCdr Eldredge Capt Franks Lt Hall	Dalmation	BK	Returns to CVE by Dalmation from Eniwetok via Parry	
6	1600	Lt Hoy	Dalmation	BL	Leaves not later than 1600.	
3	1600	Maj Goodsell	Dalmation	BM	Returns to CVE by Dalmation from Parry Island.	
	1700	Scoville ~~[illegible]~~ Kimbel Nolan	CVE-115	BN	Returns to CVE by boat from AGC-7.	
5	1700	Lt Cullen		BO	Returns to CVE from AVR #53 and AVR #38 after securing of air/sea rescue detail.	
4		M/Sgt Hermanson		BP		
21	1900	Lt Phillips Lt Venters	CVE-115	BQ	Relieves Venters at LCT 472.	

UNCLASSIFIED

[redacted]

UNCLASSIFIED

[redacted]

OPERATIONS SCHEDULE X PLUS 1 DAY

RADSAFE PARTY NO.	TIME	MONITORS	BOAT	MISSION NO.	OPERATION	PRIORITY
101	0230 [redacted]	Cdr Smith	Dalmation (with jeep hot wagon)	BR	In charge of survey operations.	A
101	0230 [redacted]	LCdr Coe	"	BC	To check data at Beach RadSafe Center with jeep.	A
101	0230 [redacted]	Maj Sheppard	"	BT	To plot data at Beach RadSafe Center. (3 copies soonest)	
101	0230 [redacted]	Capt Helgestad	"	BU	Checker and communications.	
		Maj Rossano	"	BV	ABLE Group	
		Capt Steed	"		" "	
		Lt Pierce	"	BW	" " (To change filter in filter queen)	
		LtJG Flynn	"	BX	BAKER Group	
		[redacted] Lt. Voy	"		" "	
		M/Sgt Hermanson	"		" "	
		Maj Cook	"	BY	CHARLIE Group	
		LCdr Carr	"		" "	
		Lt Woods	"		" "	
		Maj Goodsell	"	BZ	DOG Group	
		Maj McDonnel	"		" "	
		[redacted]	"		" "	
		Maj. Mather) Capt. Anderson)	Repair Cache		Monitoring group will return when mission is accomplished. (About 1030). Deliver copy of chart to Cooney (AGC-7) and Froman (AGC-7) - (one each).	
		Maj. McDonnel	-/-		With 5 photographers	

[redacted]

UNCLASSIFIED

[redacted]

OPERATIONAL SCHEDULE X PLUS 1 DAY

RADIAFS PARTY NO.	TIME	MONITORS	BOAT	MISSION NO.	OPERATION	PRIORITY
~~102~~	~~0700~~	~~Capt.Holen~~	~~AV-5~~	~~CA~~	~~Monitor for party going to Gamma A Station if necessary. Return to CVE by AV-5 boat.~~	~~U~~
104	0800	LCDR VANDERGRIFT-Joist M/Sgt Long		CB	EASY Group	R
	0800	Lt. Sullen None	Harikari	CC	Harikari returns to CVE from Eniwetok.	
105	0800	LCDR ELDREDGE-Joist Capt Franks [redacted]		CD	FOX Group	
103	0900 [redacted]	Lt. Barth	Harikari [redacted]	CE	To patrol lagoon anchorage and Engebi waters as directed.	R
107	0800	8 air monitors-Air Capt.Gaines (CTG 7.4) Ens.Ashley		CF	8 Air monitors for drones. To assist Mallory in clearing drones and to accompany drones back to Kwajalein.	
				CG	Gaines and Ashley to assist Mallory on X plus 1.	
1	0900	Ledr. King			G-7 aerial survey	
22	0830	VIP's(Fr:CVE)-CVE Boat		CI	To AGC-7 for briefing at 0900 on test results.	
21	0900	Lt.Phillips CVE Boat		CJ	Return Lt. Phillips from LCT 472 to CVE 115.	

[redacted]

[redacted]

OPERATIONS SCHEDULE X PLUS 1 DAY (Cont'd)

RADSAFE PARTY NO.	TIME	MONITORS	BOAT	MISSION NO.	OPERATION	PRIORITY
12	1200	Major Father LCDR OLIVARI Dr. NORTON Lt. CRZICHER		CK	Return to CVE from Destroyer and USS Pickaway as early as practicable.	
102	1300	Lt Col Houghton LCdr Campbell Maj Stone Dr Sowers	Joist	CH	To take jeep to edge of asphalt and walk towards tower stumps monitoring the crater to a dose 5 mr. then to evacuate.	R
100	1430	Lt Pierce	Dumstead		Lagoon Patrol	
110	1430	Col Cooney Capt Kimbel	LCI		With VIPs to Aero Island	
	1400	LCdr Oldfield Lt Barth			With LAJ-8 Party to blast footings	
	1800	Maj Mather Lt Phillips			With LAJ-8 party to island	

[redacted]

-11-

UNCLASSIFIED

[redacted]

OPERATIONS SCHEDULE Z PLUS 1 DAY

RADSAFE PARTY NO.	TIME	MONITORS	BOAT	MISSION NO.	OPERATION	PRIORITY
104	0830	Lt Barth	LCVP	BF	Film badge recovery.	R
103	0830	Maj Mather [redacted]	BUNSTEAD ABLE [redacted]	BG	To patrol lagoon anchorage R near Aomon and Bunit as directed.	
107	0830	8 Air monitors-Air (CTG-7.4)		BH	6 air monitors fro drones, To assist Vandergrift in cleaning drones and to accompany drones back to Kwajalein.	
		Capt Franks Lt Woods		BI	Franks and Woods to assist Vandergrift on Z plus 1.	R
22	0830	VIP's (Fm:CVE)-CVE Boat		BJ	To ACC-7 for briefing at 0900 on test results.	
11	0900 1700	Lt Cullen [redacted] Capt. Steed Capt. Kimbel	None	BK	On CVE as duty decontamination monitors.	

-59-

[redacted]

UNCLASSIFIED

[redacted]

OPERATION BRIDGER Z PLUS 1 DAY (CONT'D)

RADSAFE PARTY NO.	TIME	MONITORS	BOAT	MISSION NO.	OPERATION	PRIORITY
24	0900	Lt Babcock		BL	Return to CVE from USS PASIG as early as practicable.	
20	0900	Lt Phillips	LCM	BK	To return to CVE from AGC-7.	
	1230	Lt Phillips			Lt. King on LAJ-5 mission will come by CVE. 300 mr/hr mission.	
	1230	Cdr Smith [redacted] Maj Rossano Dr. Morton MSgt Daugherty Lt Speicher Lt. Flynn		BN	On CVE for LAJ-8 missions. 300 mr/hr/mission.	
	0900 1700	[redacted] Maj Stone Maj McDonnel [redacted] Lt. Babcock		ABN BO	With Mr. Cloud on special mission to Runit. In reserve for urgent missions which may arise.	
	1300	Maj. Cook			LAJ-3 party to Runit for Land Cable sample recovery	
	1300	Lt. Venters Maj. Stone Lcdr. Gilmore			[redacted] LAJ-3 party with DUKWS for water cable sample recovery With Dr. Donaldson to Aiton to collect marine samples.	

UNCLASSIFIED

7.6. MONITOR MISSIONS, APRIL 17

No.	Party	Monitor	Time Out	Time Issue	GM	IC	F.B.	0.2	5.0
201	No. Perimeter Survey (From Aeman)	OLDFIELD VANDERGRIFT	0630	0615	2	0	20	4	
202	North Swimming Survey (to go with #201 to Aeman) Aeman, Recreation Is. and Runit (plus 3 man beat crew)	FRANKS	0630	0615	2	0	6	2	
203	Freman, Bowman, Bensen and Winant, plus 4 in beat crew	BOLEN (read Peewee)	0815	0745	1	1	12	12	
204	Biological Sample (with Capt. Draeger)	HERMANSON	0830	0800	1	1	3	3	
205	Structure photo and film recovery on OCE & BuY&Ds structure (with 7 man photo crew)	SCOVILLE HOFFMAN VICARS	0830	0800	3	3	20	17	
206	Adm. Ramsey	HOUGHTON	0845	0815		1	3	3	
207	Adm. Salada	WHIPPLE	0845	0815		1	3	3	
208	LAJ-8: (Curtis, Blair Biagi, Mesyareus, Moulton, Allman, Randall Glickman, and Dwyer)	SPEICHER WOODS PIERCE STEED	Approx. 1245	1100	4	4	17	17	
209	Zero Is. Survey (dirt sample #210)	WOY COE CULLEN COOK	0900	0830	4	4	4	4	
215	LAJ-5: King and Bentsen	O'LEARY	1300	1245	1	1	4	4	
217	Monitor for Col Mc Dennell Hol. Engbi Is.	MAJ. McDONNELL	0930	0900	0	1	3	3	

No.	Party	Monitor	Time Out	Time Issue	GM	IC	F.B.	0.2	5.0
210	Dirt samples from near Engebi personnel landing (to be done by party #209)		0900						
211	Water sample collection to north and west of CVE along reef at about 10 MR/HR if possible and water survey	OLIVARI	1300	1230	1	1	2	2	
212	LAJ-3: (4 men) plus 2 men for DUKW plus 4 men boat crew (Ogle, Linnenberger) 1 LCI, 1 LCM	FLYNN PHILLIPS	0900	0830	2	2	25	12	
213	CVE Filter Queen (check and filter replacement) AV-4, AV-5 and AGC-7	SCHAPPACHER	1000	0930	1				
214	CVE evaporation check (Info. to CTG 7.6)	SMITH			1		1		
2	Drone plane clearance	MALLORY DAUGHERTY	On Station		Have Instruments				
216	South Swimming survey (Eniwetok & Parry)	MASON MALLORY	On Station		Has Instruments				
15	So. Perimeter survey (From Eniwetok)	GAINES ASHLEY	On Station		Have Instruments				
218	CVE duty decontamination Monitor	ELDRIDGE	1000	0930	1				
219	4 Men decontamination of duck	COE MOY	1300		1				
220	Helicopter	SMITH KING	1330			2	6	6	

STANDBY MONITORS - COOCSEAL
HLDS
TTSCOOO SMITH

7.6 MONITOR MISSIONS, APRIL 12, 1948

No.	Party	Monitor	Time Out	Time Issue	CM	IC	P.B.	C.2
301	N.W. Perimeter Survey: (From Engebi west, by DUKW from CVE) (Collect films and slides)	SHEPPARD HELGESTAD	0800	0745	2	2	15 (15 bootees)	15
302	Filter Queen on Geese: (Change filters, re-gas as start)	PIERCE	0900	0830	1	-	1	1
303	Cache Removal: Remove to CVE all usable and repairable equipment from cache	BARTH (Communications) one TU 7.6.4 man one of Coe's men	0900	0830	1	-	5	5
304	Personnel Landing Repair: Monitor for ship's working party at Engebi personnel landing	PIERCE	0900	0815	1	1	7	3
305	Ship Monitor: Monitor hangar deck and flight deck	SCOVILLE		0830	1	-	-	-
306	CVE Evaporators: Monitor evaporators (morning & evening)	SMITH HOFFMAN		0900 1600	1	-	-	-
307	Biological Samples: Accompany Capt. Draeger to recovery samples	O'LEARY	0900	0830	1	1	4	4
308	BuY&D's Photo: Containing photography of BuY&D's structures plus collection of film badges	GOODSELL	0900	0830	1	1	6	6

No.	Party	Monitor	Time Out	Time Issue	GM	IC	F.B.	O.2
309	Drone Clearance: Clearing planes for manned flight to Kwaj. to Eniwetok	MALLORY DAUGHERTY MASON	On Station		Previously issued			
310	S.W. Perimeter Survey: From Eniwetok west to end of Atoll and return with CIC patrol	GAINES	On Station		Previously issued			
311	Chemical Corps Recovery: Recovery of equipment and preparation for next test	SCOVILLE	0900	0830	1	1	4	4
312	Zero Island Survey: Resurvey of zero island Dirt samples at 400 and 600 yds.	MORTON COOK CULLEN WOY	0900	0830	-	4	4	4
313	Water Survey: Resurvey of water to north and west of CVE (FLYNN & OLDFIELD to plot)	OLIVARI	0930	0900	2	1	1	2
314	Filter Queen Samples: Filter exchange on AGC-7, AV-4, AV-5 and CVE-115	SHAPPACHER	0900		-	-	-	-
315	CVE Duty Decontamination:	LONG (Morning) [illegible]ED (Afternoon)		0815	1	-	-	-
316	Small Boat Decontamination: Decontamination small boats tied up to CVE	COE HERMANSON	1000	0945	1	-	-	-
317	Motion Picture Party: Roche and 5 Photographers	WOODS	1100	1045	1	1	8	8

No.	Party	Monitor	Time Out	Time Issue	CM	IC	P.B.	O.2
318	Animal Tank Recovery: Capt. Draeger, Johns and Langer	O'LEARY	1330	1315	1	1	5	5
319	2nd BuY&D's Photography:	GOODSELL	1330	1315	1	1	6	6

7.6 MONITOR MISSIONS, APRIL 19, 1948

No.	Party	Monitor	Time Out	Time Issue	Instruments CM	IC	F.B.	O.2
401	LAJ-8: 15 men & 1 photographer arrive CVE at 1315. 3 monitors required (3 man boat crew)	PHILLIPS MATHER SPRINGER	1315	1245	3	3	22	20
402	LAJ-4 and LAJ-12: 11 men arrive CVE at 1315. One monitor	ELDREDGE	1315	1245	1	1	13	13
403	Photographic Party (TG 7.1): 4 photographers requiring one monitor arrive CVE at 1315	CULLEN	1315	1245	1	1	6	6
404	TG 7.1 Staff Party: Two men requiring one monitor arrive CVE at 1315. Put danger signs on crater samples (see VANDERGRIFT)	ASHLEY	1315	1245	1	1	4	4
405	VIP Party #1: 13 VIP's arrive CVE at 0845 to Geese and back at CVE 1130. To eat on CVE. One monitor	COX	0845	0815	1	1	22	18
406	VIP Party #2: BACHER and BRADBURY to fly in helicopters over Geese about 1330. Two monitors	STONE COX	1330	1300		2	6	6

No.	Party	Monitor	Time Out	Time Issue	TM	IC	P.B.	O.2
407	VIP Party #3: ADM. WILLINGS, GEN. BARKER, COL. DANIS, CAPT. HAIGHT, COL. COONEY, CAPT. ANDERSON arrive CVE at 1330. To go to Geese by boat. One monitor. (4 man boat crew)	COOK	1330	1300	1	1	2	2
	Return by helicopter	ASHLEY						
408	Zero Island Survey: 4 Monitors to repeat survey of Engebi	FRANKS OLIVARI FLYNN WOY	0245	0215		4	6	6
409	BuY&Ds Party: 3 men to measure structures to leave CVE at 1400. 1 monitor to work at 2500 ft. from tower	BARTH	1400	1330	1	1	6	5
410	Biological Samples Recovery: To accompany CAPT. DRAKER on recovery of samples. One monitor	HEZMANSON	0900	0830	1	1	3	3
411	Drone Plane Clearance: Clearance of drones for manned flight to Kwaj. from Eniwetok	MALLORY DAUGHERTY MASON	On Station		Have Instruments			
412	Hot Crater Survey: COONEY & HOUGHTON in jeep being located by personnel in low intensity area. (1.0 to 2.0 r. mission)	COONEY HOUGHTON	1400	1330		2	6	6

No.	Party	Monitor	Time Out	Time Issue	GM	IC	F.B.	O.2
413	Instrument Test Mission: Dr. ANDREWS and party of 4 to test instruments at low intensities.	ANDREWS	1400	1330	From Lat.		6	6
414	CVE Deck Monitors: To monitor flight deck and hangar deck	SCOVILLE	When convenient		1			
415	CVE Evaporator Check: Twice daily check	SMITH	When convenient		1			
416	Engebi Filter Queen: Check, change filter & personnel landing repair monitor	PIERCE	0900	0830	1	1	4	4
417	Ship Filter Queens: Check and change filters on AGC-7, AV-4, AV-5 and CVE-115 and monitor decks	SCHAPPACHER	1000	0930	1			
418	CVE Duty Decontamination: Duty monitors to serve on quarterdeck in relays	VANDERGRIFT LONG		0830	1			
419	AGC-7 Evaporator: Checks	KIMBEL	On Station		Previously issued			
420	LAJ-14: - 5 men	GOODSELL	0930		1	-	6	6
421	To Recreation Island:	O'LEARY	0930		1	1	1	1
422	Guam Monitoring: (Fitzwilliam)	KNOWLTON	1445	1430	1	1	1	1

7.6 MONITOR MISSIONS, APRIL 20, 1948

No.	Party	Monitor	Time Out	Time Issue	Equipment CM	IC	F.B.	0.2
501	TG 7.1 Party: Equipment recovery outside 600 yards	None						
502	Crater Sample Disposal: Dump, in deep water, samples and piece of coax cable from Geese. Two monitors. (See Campbell)	VANDERGRIFT WOY	0900	0830	1	1	3	3
503	Zero Is. Survey: Repeat Zero Is. survey in same manner as on proceeding days. Four Monitors. Check filter queen and change filter	FRANKS STEED PIERCE KING	0900	0845	4	4	4	4
504A	Monitor Officer Guard: Two Monitors on beach all day. One remains at personnel landing and one is a roving monitor. The 12½ mr/hr line. AM	COE ASHLEY	0745	0715	2	2	50	4
504B	Same PM	COOK CULLEN	1200	1130				
505	TU 7.6.6 Inst. Removal: Tech. Meas. Unit to transport equipment from Engebi to Aomen by DUKW and LCM	SCOVILLE PEARSON	0900	0845	1	-	15	2
506	Water Survey: Complete water survey in one boat by a monitor. To be briefed by LCDR OLDFIELD.	OLIVARI	0915	0900	1	-	2	2

No.	Party	Monitor	Time Out	Time Issue	GM	IC	F.B.	O.2
507	Buoy Removal, LCM Arrives at CVE at 0930 to embark monitor and will remove special AVR channel buoys. One monitor	GAINES	0930	0900	1	1	10	2
508A	Biological Sample Recovery. Contamination of sample recovery, by Capt. DRAEGER	SPEICHER	0930	0900	1	1	4	4
508B	Same P.M.	ELDREDGE						
509	Helicopter Photography Mission: Two planes each with monitor for Geese	FLYNN MATHER	0945	0915	-	2	6	2
510	Ship filter queen check: Checks and changes filters on AGC-7, AV-4, AV-5 and CVE-115, and also monitors weather decks.	SCHAPPACHER	1000	0930	1	-	-	-
511	Evaporator check on CVE-115.	SMITH	1000 and	1700	1	-	-	-
512	Evaporator check on AGC-7.	KIMBEL	When convenient		Has instrument			
513	Courier trip to Eniwetok	GOODSELL	0800					
514A	CVE duty monitors AM	LONG	-	0900	1	-	-	-
514B	Same PM							

No.	Party	Monitor	Time Out	Time Issue	GM	IC	F.B.	O.2
515	Medical Conference HOUGHTON to leave CVE at 1315 for conference on AV-4	HOUGHTON	1315	-	None required			

STANDBYS:
PHILIPS
WOODS
SMITH

7.6 MONITOR MISSIONS, APRIL 21, 1948

No.	Party	Monitor	Time Out	Time Issue	GM	IC	F.B.	O.2
601	Engebi Monitor Guard. Two shifts of two monitors each. One monitor stays at Personnel Landing and the other is on a roving patrol. Set up barrel at landing for hot items including coax cable piece at plus 150 yards from landing. Take water.	ELDREDGE FLYNN FRANKS GAINES	0745 1200	0730 1130	1	1	20	4
602	O.C.E. structure inspection. Three men plus monitor to Engebi to continue structure inspection	WOY	0745	0730		1	4	4
603	Zero Island survey. Recheck island survey above 4 mr/hr, including specific readings at blast footings and at striped poles in crater. Two monitors Campbell and Hoffman for flags.	STEED MORTON CAMPBELL HOFFMAN	0900	0830	2	4	4	4
604	Hot Spot Survey. Survey hot spot on N.W. side of island (about 500 yards from Zero). Mark 200 mr/hr line with tape. Two monitors required.	COOK ASHLEY O'LEARY	0900	0830	-	2	2	2
605	Ships Evaporator check. On CVE-115 On AGC-7	SMITH HOFFMAN KIMBEL	AM PM	AM PM	1	-	-	-
					Man required on AGC-7			

No.	Party	Monitor	Time Out	Time Issue	GM	IC	F.B.	O.2
606	Ships filter queens. Check and change filters on CVE, AV-4 and AGC and monitor weather decks.	SCHAPPACHER	1000	-	None required			
607	CVE duty monitors. Two monitors on relay for decontamination of personnel	LONG ROSSANO	0900	0830	1	-	-	-
608	Aoman trip. TU 7.6.6 to prepare equipment on Aoman	CULLEN	0900	-	None required			
609	Move filter queen to 200 ft. circle as near down-wind as possible. Replace filter and start and make it work	PIERCE	1300	1245	-	1	1	1
610	4 VIP's to island by helicopter.		0900	0845	-	1	5	5
611	Mr. DeSelm with 17 man.	OLIVARI	1230	1215	-	1	20	4
612	5 VIP's to beach.	HOUGHION	1330	1236	-	1	6	6
613	Mr. Benson and crew to timing station	None						

Copies to: 1 WINANT
1 Instrument Lab.
1 OLDFIELD
1 CAMPBELL
1 Photo Lab.
3 STONE
1 CAMPBELL (for beach monitors)

7.6 MONITOR MISSIONS, APRIL 22, 1948

No.	Party	Monitor	Time Out	Time Issue	Equipment GM	IC	F.B.	O.2
701	Engebi Monitor Guard: AM Two shifts of two monitors each one monitor stays on personnel landing and the other is on roving patrol Morning party to pick up hot articles. Afternoon party to take can of paint and paint CONTAMINATED on drum on cable winch and "hot" container at personnel landing.	OLIVARI STEED	0745	0730	1	1	50	4
	PM	PHILLIPS O'LEARY	1200	1130	-	-	2	2
702	Biological Recovery: Capt. Draeger to beach to recover equipment	None	0745	-	-	-	-	-
703	AGC Staff Trip: Winant and 30 officers AGC and 4 monitors to Engebi for orientation. Clothing for 30 men will go in same boat.	COX BARTH SPEICHER WOODS	0845	0815	2	2	30	6
704	Yoke AVR Conference: Conference in Fwd Rdy Rm 0830 to orient new AVR monitors in Yoke Day Operations	CULLEN McDONNELL ROSSANO COOK BOLEN LONG SHEPPARD MORTON MASON GOODSELL	0830	-	-	-	-	-

No.	Party	Monitor	Time Out	Time Back	TM	22	P.E.	1.2
735	Survey Party: Survey of Tower Tip of Island. Plotting of contours from beach in towards tower stump. A monitors on a 0.5 r mission. (500 mr dose) Naval swab to be taken upon completion of mission	SCOTTIE ROCKWELL MASON WEY	2000	0450	-	4	4	4
736	Crater Flag Planting: 3 men to plant flags in crater and take readings every 100' to tower and collect samples at each location. (500 mr mission) Naval swab to be taken upon completion of mission	SCOTTIE ANDERSON HOFFMAN	1400	1330	-	3	3	3
737	Tank Decontamination: Sowman and monitor (Campbell) to make inspection of tank. (500 mr mission)	CAMPBELL	2000	0645	-	MX-6	2	2
738	Filter Change on Tower: Move filter tower to about 300' from tower and as near to downwind as possible change filter and start.	PIERCE SAINES	1000	0645	-	1	3	1

No.	Party	Monitor	Time Out	Time Issue	TM	IC	F.P.	O.2
709	Ship's Filter Queen: Change filters and service filter queens on AOC-7, AV-4, AV-5, and CVE-115. Monitor weather decks.	SCHAPPACHER	1000	0945	1	-	-	-
710	Biological Recovery: Boat to take Capt. Draeger from Engebi to Aomen stopping at two islands on the way.	None	1000	-	-	-	-	-
711	CVE Duty Monitors: Duty monitors on CVE-115	A.M. ASPLEY P.M. FRANKS	-	0830	1	-	-	-
712	Big Ben VIP Trip: Party of 17 from AOC to Engebi, Colonel Grills is Senior Officer. Meet party at Engebi.	COOK DAUGHERTY	1400	1330	-	2	20	4
713	Thumbscrew Officers: 6 officers to Geese. Bootees and gloves required.	Dr. MOLEN	1400	1330	-	1	10	2
714	OCM Party: Arrived on Geese without monitor. 1 monitor from No. 703 assigned.	WOODS	1000	-	Previously issued			

No.	Party	Monitor	Time Out	Time Issue	CW	IC	F.E.	S.Z
801	Engebi Monitor Guards AM: Two shifts of two monitors each. One monitor stays PM: at personnel; the other is on roving patrol. Guards to collect "hot" items and place in "hot" can near personnel landing. Engebi will probably be sprayed with DDT sometime during the day. Guard monitors are to clear all personnel off Engebi prior to the spraying.	SPEICHER DAUGHERTY WOOD	0745 1200	0730 1130	1	1	20 2	4
802	OCE Photographic Party #1 Monitor with Minuteman and one monitor in two helicopters to photograph OCE structure displacement. Helicopters land party south of personnel landing and party photographs on foot.	OLIVARI	0815	0800	-	XXX	5	2
803	OCE Photographic Party #2 Two photographers by boat to personnel landing to join party in #802 for surface photography.	NONE REQUIRED	0830		None Required (Badges issued by #802 monitor)			
804	Engebi Filter Queen Change filter, service and check filter queen near tower stumps. (Seen FIZZOE) SPIZZI and BRENNAN install cascade impactor and make dust test.	CULLEN FRANKS	0830	0815	-	2	4	4
811	OCE Party Monitor to accompany Major DeBardeleben and 1 Photographer to 1000' structure	OLDFIELD	1430	1415	-	1	2	4

No.	Party	Monitor	Time Out	Time Issue	GM	IC	P.B.	O.2
805	Ship's Filter Queens: To change filter, service and check filter queens on AGC-7, AV-4, AV-5 and CVE-115. And to monitor weather decks on the same ships.	SCHAPPACHER	0900	0830	1			
806	Ship's Evaporator Check: Monitor evaporators on AGC-7 (Kimbel) and CVE-115 (Hoffman)	HOFFMAN KIMBEL			1			
807	CVE Duty Decontamination Monitors Two monitors on shift as duty monitors on the CVE quarterdeck.	AM: PIERCE PM: GAINES		0815 1230	1 1			
808	N.W. Perimeter Island Survey Survey first four islands to the west of Engebi. DUKWs with CIC personnel will pick up monitors at ship.	HELGESTAD ASHLEY MORTON	0900	0830		2	20	4
809	Mr. DeSelm's Party Party of 17 arrive Geese Landing at 1315. Monitor to go to Geese on boat taking P.M. Monitor Guards to island. Monitor take sufficient bootees and gloves for party.	STEED	1200	1145		1	20	2
810	Biological Party Capt. DRAEGER to Engebi and Aomen.	NONE	0830					

7.6 MONITOR MISSIONS, APRIL 24, 1948

No.	Party	Monitor	Time Out	Time Issue	GM	IC	F.B.	O.2
901	Engebi Monitor Guard. One bull monitor and four on duty on Engebi from 0800-1700. Supervises safety of all operations on Engebi.	SMITH PHILLIPS STEED BARTH GAINES	0715	0700	3	3	40	4
	Place film badges on all personnel inside 550 yds. Require gas masks for all dust producing operations inside 550 yds. To take water and food; To take booties, masks, cape, clothing, for 40.	OLIVARI PIERCE FRANKS CULLEN O'LEARY	1145	1100				
902	Engebi Filter Queen. Continue Dust Tests.	BRENNAN	1145	0900	1	-	2	2
903	Ship's Filter Queen. To service filter queens on AGC-7, AV-4, AV-5 and CVE-115 and monitor weather decks.	SCHAPPACHER	0900	0845	1	-	-	-
904	CVE Duty Monitors. Two monitors on shift for decontamination.	AM: WOY PM: VENTERS		0815 1215	1 1	- -	- -	- -
905	DD Monitor Briefing. Meeting of all monitors scheduled for jobs on DDEs at 0900 in forward ready room.	OLIVARI MATHER MORTON SPEICHER VENTERS FRANKS ROSSANO STEED HELGESTAD MCDONNELL O'LEARY PIERCE CULLEN						

7.6 MONITOR MISSIONS, APRIL 25, 1948

No.	Party	Monitor	Time Out	Time Issue	GM	IC	F.P.	0.2
1001	Engebi Monitor Guard One senior monitor and four monitors on duty on Engebi from 0800 to 1700. Supervise radiological safety of all operations on Engebi. Place film badges on all personnel going inside 550 yards. To take bootees, caps, and masks for 40 persons. To keep roster of all personnel on island, including: name, rank, organization, officer in charge and mission.	COOK (Chief) ASHLEY MASON SPEICHER KNOWLTON	0730	0715	2	2	50	10
		GOODSELL (C) WOODS MOSS MORTON HOLAN	1145	1130	-	-	5	-
1002	Tank Removal Monitors 3 monitors to assist BOWMAN in recovery of his tank from crater. To work in shifts with 8 LAJ-2 men. Take first aid kit. Take clothing for 8 people.	HOUGHTON STONE MCDONNEL	0730	0715	-	3	12	12
1003	CVE Duty Monitor 2 monitors on shift for decontamination of all personnel returning from Engebi	AM: ROSSANO	-	0815	1	-	-	-
		PM: WOY	-	1215	1	-	-	-
1004	Ship's Filter Queens To service filter queens on AJC-7, AV-4, AV-5, CVE-115 and monitor weather decks.	SCHAPPACHER	0930	0915	1	-	-	-
1005	Dead Duck Recovery 1330	SMITH OLDFIELD ANDREWS SCOVILLE OLIVARI MURPHY	0900	0845	1	-	-	-

7.6 MONITOR MISSIONS, APRIL 26, 1948

No.	Party	Monitor	Time Out	Time Issue	GM	IC	F.B.	0.2
1101	Engebi Monitor Guard One senior monitor and 3 monitors on duty on Engebi from 0815-1700. Supervise radiological safety of all personnel on Engebi. Place film badges on all personnel inside 550 yds. To keep roster of all personnel on Engebi, including name, rank, organization, officer in charge and mission.	AM: OLIVARI FRANKS O'LEARY PHILLIPS PM: SMITH KNOWLTON STEEL GAINES	0745 1145	0730 1130	2	2	30	10
1102	CVE Duty Monitor Two monitors on shift for decontamination of all personnel returning from Engebi.	AM: VENTERS PM: ROSSANO		0815 1215	1 1			
1103	Aomen Island Survey Rehearsal Party to Aomen to place more stakes and go over the old stakes. To make detailed plans of Y plus 1 survey	SMITH SHEPPARD COE GOODSELL WOY WOODS	0830		Stakes as required			
1104	Water Survey Rehearsal Briefing in Forward Ready Room at 0830. To use two boats at 0930 for practice in transmission and plotting of boat data.	BRENNAN VICARS KNOWLTON BARTH WOODS STONE HOUGHTON	OLDFIELD CAMPBELL MOSS NUCKEL FLYNN WATERS	0830	SCR-300's as required			
1105	Ship's Filter Queens To service filter queens on AOG-7, AV-4, AV-5, CVE-115 and monitor weather decks.	SCHAPPACHER	0930	0915	1			

7.6 MONITOR MISSIONS, APRIL 27, 1948

No.	Party	Monitor	Time Out	Time Issue	CM	IC	F.B.	0.2
1201	Current Survey	BARTH MOSS WATERS WOODS	0830					
1202	Island Survey Party	SMITH SHEPPARD COE GOODSELL WOY WOODS	1330					

NO CVE MONITOR.

UNCLASSIFIED

~~SECRET~~

OPERATIONS SCHEDULE FOR Y-3 DAY AND EARLIER

RADIUS PARTY NO.	TIME	LOCATIONS	TRANS.	MISSION NO.	OPERATION
10	Y-4	LT BABCOCK	On station with LST 219	B	On station at Ujelang with LST 219 as monitor. To return by plane via Kwajalein on Y+2.
15		SKC Wademann	On station	A	At Kwajalein as instrument repairman-Remain until Y+7.
15	Y-8	Major Mather LCDR Eldredge	ATC Plane	C	To Kwajalein for training as air monitors. To return to CVE on Y-4.
12	1330 Y-3	Major Rossano (DE-275 Tucker)	LCI (Ferry Able)	D	Transfer to U.S.S. TUCKER from CVE as DE monitor. To return on Y+4.
12	0730 Y-3	Capt. Helgestad (DE-696 Spangler)	LCI (Ferry ATM)	E	To Gardiner's Bay for transfer to U.S.S. SPANGLER as DD monitor. To return on Y+4.
12	0730 Y-3	Capt. Steed (DE-697 George)	LCI (Ferry ATM)	F	To Gardiner's Bay for transfer to U.S.S. GEORGE as DD monitor. To return on Y+4.
20	Daily at 0845 prior to Y-2	Capt. Nimbel Capt. Mallory Lt. Flynn Lt. Nolan YN2 Harmon	CVE-Boat	G	To man Radsafe Center on AGC-7. Remain on AGC-7 after Y-2.
	Y-3	Lcdr. Campbell Lt. Nuckel			Set up cache

[redacted]

-1-

-30-

UNCLASSIFIED

[redacted]

OPERATIONAL PLANNING FOR Y-2 DAY

RADIOLOGICAL PARTY NO.	TIME	PERSONNEL	TRANS.	MISSION NO.	MISSION DETAIL
19	0800	Sergeant [redacted]		H	To AD-7, AV-4, AV-5 and CVE-1-5 to service filter queens.
19	0800 1700	Lt Coville Capt Dreager Cdr Hoffman Cdr Langer Lt Vicars HM2 Jones WE3 Pearson Lcdr Erickson	LCM [redacted]	I	To zero island to prepare test equipment for detonation.
19	0900	Cdr Andrews Mr Seigel	LCVP	J	To test LCM (LCM & DUKW) and return.
2 6 24 16	1300	Lcdr Vanderrift Lt Phillips W/Sgt Long W/Sgt Dougherty R/2 Hall Ens Anthony Lt Vicars Lt Flores	LCVP (S L [illegible] -ZERO)	K	Via LCM to Enjebelok and various monitor missions during test. Upon arrival of LCM at Enjebelok, LCM to return to boat pool and boat crew to U.S.S. [illegible], Lt. Walvers to U.S.S. PICKAWAY (PA-222. Deliver Maj. [illegible] and Lcdr Eldredge to U.S.S. [illegible] BAY AVP-27.
15	0730 0730	Major Palmer Lcdr Lacrosse Lt. Alch [illegible]	LCI LCI		
9	1400	Capt Franks	PTB	L	To AV-5 as topside monitor.
22	1430	VIPs [illegible] & Waite	LCI & PTB	M	VIPs arrive Kwajalein via LCI and are transferred to CVL.
18	1700	LtCol Hoffman Dr. Shipman	PTB	N	To AV-4 to spend night and participate as director party on Y-2 operations.

[redacted]

[redacted]

OPERATIONS SCHEDULE FOR Y-1 DAY

RADSAFE PARTY NO.	TIME	MONITORS	TRANS.	MISSION NO.	OPERATION
18	0530	LtCol Houghton Dr Whipple	AV-4 Boat	O	Houghton and McDonnel from AV-4 to ZERO island. Proceed to tank revetment and remain there until 1130. TG 7.1 vehicle will be available for their use.
19 [redacted]	0800	Capt Dragger Cdr Hoffman Lt Vicars HMC Johns	LCVP	P	T.U. 7.6.6 party to ZERO island place film badges, biological samples and start collective protector.
22	0830-1100	VIPs	IPB	Q	To AGC-7 for VIP briefing.
20 [redacted]	0830	Dr Scoville Capt Knowlton Dr. Nolan & 2 radiomen	IPB	R	To AGC-7 to join Radsafe Center and remain after detonation.
19 [redacted]	0900	Cdr Andrews Mr Seigel Cdr. Smith	LCVP	S	To test LCM (LAME DUCK) and Rujoru to start collective protector and cascade impactors.
	1030	Cdr Minant	IPB	T	To AGC-7 to attend staff conference.
19 [redacted]	1045	Cdr Andrews Mr Seigel Cdr. Smith	PPB	U	From LCM (LAME DUCK). To CVE with Andrews and Seigel.

[redacted]

UNCLASSIFIED

[redacted]

OPERATIONS SCHEDULE FOR Y-1 DAY (CONT'D)

RADSAFE PARTY NO.	TIME	MONITORS	TRANS.	MISSION NO.	OPERATION
21 18	1145	CAPT Dreeger Cdr Hoffman Lt Vicars HMC Johns LtCol Houghton Dr Shipple TG 7.6 Jeep	LCVP	X	Returns TU 7.6.6 party to CVE with Houghton from disaster party. Jeep placed on LCVP prior to 1100. On return LCVP and jeep brought aboard CVE, via ACC-7, where Vicars is debarked.
	1300	Cdr Vincent	FPB	Y	Returns Vincent from staff conference on ACC-7 to CVE. On return FPB brought aboard CVE.
1.	1330	Lcdr King	ATC C-47	Z	Arrives Eniwetok from Kwajalein to remain after detonation as C-47 radsafe survey plane monitor.
4. 5. 3.	1600	Major McDonnel Dr Norton Capt Bolen 1stSgt Mason Major Goodnell Lt Speicher	NV-5 Boat or 7.6 FPB	AA	Party for Parry and NVR's picked up from CVE at 1600 and taken to Parry Island. Monitors to proceed from Parry on various assignments.
	1745	Cdr. Vincent			T. ACC for conf.

UNCLASSIFIED

[redacted]

OPERATIONS SCHEDULE FOR Y DAY

RADSAFE PARTY NO.	TIME	MONITORS	TRANS.	MISSION NO.	OPERATION
4	0400	Maj McDonnel Dr. Morton Capt Bolen 1st Sgt Mason	AVR-38	AB	Board AVR-38 on return of this boat to Parry Island.
5	0400	Maj Goodsell	AVR-53	AC	Board AVR-53 on return of this boat to Parry Island. Remain on board for air/sea rescue.
	H (approximate time of detonation)				
4	H plus 10 min.	Maj McDonnel Dr. Morton Capt Bolen 1st Sgt Mason	AVR-38	AD	Leave Parry Island for ZERO Island. Arrival about 0600.
				AE	1st Sgt Mason remains aboard AVR-38.
				AF	Monitor land cable winch.
				AG	Monitor operation at Gamma stations. B & A.

OPERATIONS SCHEDULE Y-DAY (Cont'd)

RADSAFE PARTY NO.	TIME	MONITORS	BOAT	MISSION NO.	OPERATION	PRIORITY
7	H plus 10 min.	Maj Cook Maj Sheppard	Heli-copter	AH	In helicopter to take-off from CVE and land on Zero Island near winch.	U
				AI	Clear landing of other helicopters.	
				AJ	Monitor for land cable party. Return to CVE-115 by AVR #38.	
8	H plus 20 min.	Ens Ashley	Photo. boat	AC	Leave Eniwetok for Coral Head Photo Tower to assist in re-cover of film and return to Eniwetok.	U
1	H plus 30 min.	LCdr King	C-47	AN	C-47 mission starts aerial survey on orders of Commander Air Forces. (Big Ben)	R
2	H plus 2 hr.	LCdr Vandergrift M/Sgt Daugherty Lt Phillips M/Sgt Long Lt. [illegible]	None	AL	Monitor drone planes upon landing at Eniwetok. Filter units removed and disposed of by LMJ-2 personnel. Clear island.	U
				AM	Watch for fall-out	

UNCLASSIFIED

[redacted]

OPERATIONS SCHEDULE Y-DAY (Cont'd)

RECORD COPY NO.	TIME	MONITORS	BOAT	MISSION NO.	OPERATION	PRIORITY
6	H plus 3 hr.	Lt Woy Lt Cullen	LCM (Tank)	AQ	Board LCM from CVE proceed to Zero Island. LCM beaches near tank revetment. (Bowman flies in helicopter from Eniwetok to Aomen on completion of drone filter removal.)	U
			(MEC Boat)	AR	Lt Woy returns to CVE by boat with crater sample to CVE-115.	
				AS	Lt Cullen returns with crater samples to Eniwetok.	
				AT	After samples are placed in storage at Eniwetok Lt Cullen returns to CVE.	
25	H plus 3 hr.	Maj Moss		AU	Monitor in second helicopter, monitoring for tank guiding helicopter.	U
9	H plus 1 to H plus 4	Capt Franks		AV	Monitor landing by helicopter and boat of samples from Zero Island on AV-5.	U
11	H plus 1 and later	Capt Gaines Lt O'Leary		AW	Monitor returning helicopters, R personnel, and land samples on CVE.	

-33-

UNCLASSIFIED

[redacted]

OPERATIONS SCHEDULE Y-DAY (Cont'd)

RADSAFE PARTY NO.	TIME	MONITORS	BOAT	MISSION NO.	OPERATION	PRIORITY
16	H plus 20 min.	Lt Pierce	L-5	AX	Surveys Runit by L-5 from Eniwetok. L-5 in company recovers technical films from Runit Photo.Tower. After leaving Runit proceeds to Parry where Runit clearance is radioed to AOC-7.	U
~~21~~	~~H plus 3 hr.~~	~~LCdr Oliveri~~	~~CVE115 boat~~	~~AY~~	~~Coce aboard LCT 472 as monitor off Aomen remains over night or until relieved.~~	R
13	When directed by CTG 7.6	Cdr. Smith [redacted] Joist Lt Barth Joist [redacted]	[redacted] Able [redacted] Baker	AZ	Lagoon re-entry patrol to debark and precede CVE-115 into Aomen Anchorage until and then patrol anchorage, and collect water sample. At H + 7 place filter queen in operation near Gamma B Station.	R anchored
13	When directed by CTG 7.6	Maj. Brennen [redacted] Lt Woods Bumstead	Bumstead [redacted] Able [redacted] Baker	BA	Lagoon re-entry patrol to debark from CVE upon anchoring and patrol to W and NW in area of possible fall out.	R
14	When directed by CTG 7.3	Lt Vicars Capt Knowlton	HariKari Able HariKari Baker	BB	Lagoon re-entry. Boats from AOC-7 precede column into Runit anchorage.	
4	H plus 4 hr.	Maj McDonnel Maj Sheppard Dr. Morton Capt Bolen 1st Sgt Mason Maj Cook	AVR #38	BC	Returns to CVE via AV-5.	
				BD	1st Sgt Mason remains aboard AVR #38 and accompanies it for air/sea rescue.	
23	H plus 5-6 hr.	LCdr Coe Lcdr. Smith	AV-5 Boat	BE	LMJ-4 and LMJ-5 Mission to timing station and Gamma B from CVE.	U

UNCLASSIFIED

SECRET

OPERATIONS SCHEDULE V-200 (Cont'd)

RADIO PART NO.	TIME	PERSONNEL	BOAT	MISSION NO.	OPERATION	PRIORITY
23	H Plus 2 Hr.	Lcdr Coe LCdr Smith	AV-5 Boat	BG	Return to CVE from LMC-4 ALLT-5 mission to zero islands.	
2(Canceled)	1300	Lt O'Leary	(Canceled) Boat	BH	Boat to CVE to pick up O'Leary, to do LSO shot recovery.	
16	1400	Lt. Pierce	L-5	BI	Re-checks Runit by L-5.	
9	1600	Capt Franks	CVE Boat	BJ	Returns to CVE from AV-5.	
16 2 6	1600	Lt Pierce Ens Ashley Lt Cullen	Dalmation Zero	BK	Returns to CVE by Dalmation from Eniwetok personnel landing via Parry Island Dropping. Leaves Eniwetok not later than 1600.	
3	1600	Lt Speicher	Dalmation Zero	BL	Returns to CVE by Dalmation from Parry Island.	
5 4	1600	Major Goodsell 1stSgt Mason		BO BP	Return to CVE from AVR#53 and AVR#35 after securing of air sea rescue detail.	
21	1900	Lcdr Coe Lcdr Olivari	CVE-115	BQ	~~Coe relieves Olivari on LCI-496 off Ponape.~~	
	1400	Lt O'Leary	TG 7.6	BIA	With Capt Dreager to make bird count	
	2000	Cdr Hoffman Cdr Smith			Evaporator check	
	1400 1500	Lt Barth Lt Vicars	LCVP	BQC	Lagoon Patrol	
		Dr Knowlton Capt Franks			Return to CVE 115	
	2000	Lt Vicars			CVE Rainout monitor	

SECRET

UNCLASSIFIED

[redacted]

OPERATIONS SCHEDULE Y PLUS 1 DAY

RADSAFE PARTY NO.	TIME	MONITORS	BOAT	MISSION NO.	OPERATION	PRIORITY
101	0830	Cdr Smith Maj. Sheppard Lt Woy	LCVP	BR	Survey operations on Bijiri (ABLE Group).	R
101	0830	Lcdr Coe Maj. Goodsell Lt Woods Sgt. Mason	LCVP	BS	Survey operations on Aomen (BAKER Group).	R
26	0700 1700	Maj. Stone Lcdr Oldfield Lt Nuckel	None	BT	Bojiri CVE Operations Group	
					Monitoring group will return when mission is accomplished. (About 1030). Deliver copy of Chart to Cooney (AGC-7) and Fronan (AGC-7) (One each) as soon as possible).	
	1400	Ashley	Helicopter		With Draeger to find biological samples	
	1300	Woods	PT3		Courier of charts to AGC-7	

[redacted]

OPERATIONS SCHEDULE Y PLUS 1 DAY

[redacted]

RADIOLOGICAL PARTY NO.	TIME	MONITORS	BOAT	MISSION NO.	OPERATION	PRIORITY
104	0830	Capt Goines Houghton	LCVP	CB	CH JAIT Group	R
105	0830	~~[redacted]~~ Ashley Knowlton	LCVP	CD	DOC Group	
103	0830	LtCol Houghton Lt. Speicher	BUSTEAD BOAT BUSTEAD BOAT	CE	To patrol lagoon anchorage near Kwajalein and Bunit as directed.	R
107	0830	8 air monitors-Air (CTG-7.4)		CF	Air monitors for drones. To assist Vandergrift in clearing drones and to accompany drones back to Kwajalein.	
		Major Esther Ledr Eldredge		CG	Esther and Eldredge to assist Vandergrift on Y plus 1.	R
	0830	None	LCVP	CH	Karikari leaves Eniwetok to return to CVE.	
22	0830	VIPs (Pa:CVE)-CVE Boat		CI	To CC-7 for briefing at 0900 on test results.	
~~21~~	~~0900~~	~~Ledr Gee~~	~~CVE Boat~~	~~CJ~~	~~Return Ledr Gee from LCI 472 to CVE 115.~~	
11	0900 1700	Norton ~~[redacted]~~ ~~[redacted]~~ Moss	None	CK	On CVE as duty decontamination monitors.	
	0600	Campbell			CVE evaporator check	
	0930	Kimbell	LCI		VIPs to Aomon	
	1400	Scoville Andrews Siegel Vicere			To Lame Duck and Bujora	[redacted]

-11-

-35-

OPERATIONS SCHEDULE Y PLUS 1 DAY

BRIDGE PARTY NO.	TIME	MONITORS	BOAT	MISSION NO.	OPERATION	PRIORITY
104	0830	Capt Gaines Houghton	LCVP	CA	CH JELIT Group	R
105	0830	[redacted] Ashley Knowlton	LCVP	CD	DOC Group	
103	0830	LtCol Houghton Lt. Speicher	BU STZ.D BRE BRESTZ.D BRER	CE	To patrol Lagoon anchorage near Kwajalein and Bunit as directed.	R
107	0830	8 air monitors-Air (CTG-7.4)		CF	Air monitors for drones. To assist Vandergrift in clearing drones and to accompany drones back to Kwajalein.	
		Major Mather Lcdr Eldredge		CG	Mather and Eldredge to assist Vandergrift on Y plus 1.	R
	0800	None	LCVP	CH	Marikari leaves Eniwetok to return to CV1.	
22	0830	VIPs (Fm:CVE)-CVE Boat		CI	To CC-7 for briefing at 0900 on test results.	
~~21~~	~~0700~~	~~Lcdr Cox~~ Morton	~~CVE Boat~~	~~CJ~~	~~Return Lcdr Cox from LCM 472 to CVE-115.~~	
11	0900 1700	[redacted] [redacted] Moss	None	CK	On CVE as duty decontamination monitors.	
	0600	Campbell			CVE evaporator check	
	0930	Kimbell	LCI		VIPs to Aomon	
	1400	Scoville Andrews Siegel Vicere			To Lone Duck and Rujoro	[redacted]

-11-

[redacted]

[redacted]

UNCLASSIFIED

OPERATIONS SCHEDULE Y PLUS 1 DAY (Cont'd)

RADSAFE PARTY NO.	TIME	MONITORS	BOAT	MISSION No.	OPERATION	PRIORITY
24	0900	Lt Venters		CL	Return to CVE from USS PICKAWAY as early as practicable.	
20	0800	Lt Flynn Lt Vicars Capt Knowlton	LCVP	CK	To return to CVE from AGC-7.	
	1300	[redacted] Olivari [redacted] Smith [redacted] Mason Venters		CN	On CVE for LAJ-6 missions.	
	0900 1700	Lt Barth Capt Bolen		CO	In reserve for urgent missions which may arise.	
	1000	Maj McDonnel Lt Cullen Lt O'Leary Lt Pierce	PPB	CP	By boat to Gardiners Bay to be placed aboard destroyers. To arrive Gardiners Bay prior 1400.	
	2000	Hoffman			CVE Evaporators	

	Y + 4	Maj Rossano Capt Helgestad Capt Steed Maj McDonnel Lt O'Leary Lt Pierce Lt Cullen			To return to CVE-115 from DD's and DE's.	
	0900	Lt Barth			With Erickson and Linthicum to Bi'jiri and Rojoa	
	1000	Schappacher		- 12 -	To dust collectors, to check decks	
	1300	Speicher			LAJ-5 to Elaine	

[redacted]

EQUIPMENT ISSUE ON YOKE PLUS ONE DAY

No.	Party	Monitors	Time Issue	Time Out	GM	IC	FB	0,2
101	Island survey (Biijiri ABLE Group)	CDR SMITH MAJ SHEPPARD LT.WOY	0745	0830	1	3	3	3
101	Island survey (Aoman, BAKER Group)	LCDR COE MAJ GOODSELL 1ST LT WOODS	0745	0830	1	4	4	4
102	ERICKSON & LINTHICUM to count structure	LT BARTH	0830	0900	1	1	3	3
103	Boat Patrol	LT COL HOUGHTON	0800	0830	1	1	7	2
		LT SPEICHER	0800	0830	1	1	5	2
104	Charlie Group	CAPT GAINES	0800	0830	1	1	4	2
105	Dog Group	ENS ASHLEY	0800	0830	1	1	4	2
11.	CVE Duty Monitors	DR. MORTON	0815		1			
		MAJ MOSS	1145		1			
12.	Destroyer Monitors	MAJ MC DONNEL	0830	1000	3		6	3 (Charger)
		LTJG O'LEARY	0830	1000	2		6	3 (Charger)
		LT CULLEN	0830	1000	2		6	3
		LT PIERCE	0830	1000	2		6	3
	Reserve Monitors	CAPT BOLEN	0845			1	6	3
		LCDR SMITH	0845			1	6	3
	LAJ-8 Monitors 300 mr mission	LCDR OLIVARI	1100	1300		1	4	2
		CDR SMITH	1100	1300		1	4	2
		1ST SGT MASON	1100	1300		1	4	2
		LT VENTERS	1100	1300		1	4	2
	LAJ-5 Monitor	LT SPEICHER	1100	1300	1	1	5	5

EQUIPMENT ISSUE ON YOKE PLUS TWO DAY

No.	Party	Monitors	Time Issue	Time Out	Trans.	IC	GM	FB	0.2
201	Zero Island Survey: Survey Aoman-Biijiri including collections in "Hot Container" of hot sources on Biijiri. 3 monitors on routine mission. Coe to collect soil samples at all blast footings.	COE SMITH GOODSELL SMITH, C.H.	0830	0815	LCM-26	3	1	3	3
202	Drone Tank Operation IAJ-2 Repetition of Yoke-Day Tank Operation with our monitors and radio helicopter to meet Bowman and 7 men on Biijiri at 0845. Safety helicopter to be used with Moss aboard to fly from CVE.	MOSS WOY WHIPPLE	0800	0815	LCM-20 and Helicopter	3	1	11	11
203	IAJ-4 and IAJ-12 Party Party to recover data and equipment from timing station on Biijiri. Routine mission, 13 men in party.	GAINES	0730	0745	AV-5 Boat	1	1	17	2
204	N.E. Perimeter Island Sweep Two DUKWs by CVE between 0900 and 0930. To take two monitors on a joint TG 7.5 and 7.6 survey. Routine mission. Langar and Pearson to go along to collect badges and papers. Runit to Engebi.	OLDFIELD FLYNN LANGER PEARSON, ME3	0830	0900	DUKW's	3	2	7	4
205	IAJ-8 Party Party to recover data from blast footings and general damage. 300 mr mission.	OLIVARI VENTERS	1330	1400	AV-5 Boat	1	-	12	12

EQUIPMENT ISSUE ON YOKE PLUS TWO DAY (CONT'D)

No.	Party	Monitors	Time Issue	Time Out	Trans	GM	IC	FB	0.2
206	S.E. Perimeter Island Survey. Two DUKW's from Eniwetok to survey island from Eniwetok to Runit. Monitors are on station at Eniwetok. To survey swimming beaches at Runit, Parry and Eniwetok.	MATHER ELDREDGE		0930	DUKW's	Previously Issued			
207	Gen. Hull's VIP Party Party direct to Biijiri to view results on Aoman-Biijiri. Cooney and Houghton as monitors. Houghton to take all instruments, gloves, bootees, badges, etc. to Biijiri. Two vehicles to be available at Landing point for use of party. Towels to be taken to cover jeep seats.	HOUGHTON	1215	1230	LCVP-33 and AVR		2 (MK-6)	8	8
208	Lagoon Water Survey Survey of Aoman anchorage and fallout to be plotted in Air Plot. One boat with one monitor. One radioman to be taken and TCS used. Routine mission.	BARTH	1315	1330	LCVP-1 24	1	1	5	5
209	TU 7.6.6 Recovery Party Party to recover data and equipment from Aoman-Biijiri. Routine mission. 6 men in party (including monitors)	SCOVILLE VICARS	0845	0900	LCM-2	1	3	5	5
210	Biological sample recovery Party. Draeger, Johns and monitor to go after biological sample cans in shallow water near causeway.	WOODS	1330	1400	LCM-26	-	1	3	3

EQUIPMENT ISSUE ON YOKE PLUS TWO DAY (CONT'D)

No.	Party	Monitor	Time Issue	Time Out	Trans	GM	IC	PR	0.2
211	Ships Filter Queens To ACC-7, AV-4, AV-5 and CVE-115 to change filters monitor Runit anchorage and ships' weather decks.	SCHAPPACHER	0845	0900	CVE Boat	1	-	-	-
212	CVE Evaporator Check Check #1, 2 and 3 evaps on CVE at 0800 and 2000 daily.	SCHAPPACHER	0800	0800		1	-	-	-
213	CVE Duty Monitors Two monitors on shift at issue deck for decontamination. To monitor once each shift the flight deck hangar deck and water at base of gangway.	AM: COOK PM: ASHLEY	0815 1145	0830 1200	None	1 1	- -	- -	- -
214	Drone Plane Clearance Monitors on station at Eniwetok to continue monitoring of drones and of Eniwetok Island for fall-out. Assisting air monitors decontaminating drones.	VANDERGRIFT PHILLIPS LONG DAUGHERTY	On Station		None Previously issued.				
215	Plotting room duty	STONE	*	*	*	*	*	*	*
216	Shower monitor CVE	VICARS	-	-	-	-	-	-	-
218	Jeep Maintenance and Coach Survey Take gas for jeeps and weapons carrier.	MORTON CAMPBELL	0830	0900	LCM-20	-	-	1	1

EQUIPMENT ISSUE ON YOKE PLUS TWO DAY (CONT'D)

No.	Party	Monitor	Time Issue	Time Out	Trans	GM	IC	FB	0,2
219	BuY&D's Survey	FRANKS	0815	0830	LCM-26	-	1	2	2
220	LAJ-3 Party To Aoman with 9 men and monitors to look for land samples. Will then go in boat to water cable to recover water cable samples. Two monitors on routine mission. To arrive CVE at 1330 to pick up monitor and clothing 500 mr mission.	SPEICHER MASON	1330	1315	AV-5	1	2	12	12
221	Buck Rodgers VIP Party Russel, CO of AV-5, Gen. Ogchen, Dr. Smith, Holloway, Mark and Froman arrive CVE at 1315 to change cloths and pick up Morton. To leave CVE for Aoman in 7.6 LCVP.	MORTON	1300	1330	LCVP	1	1	9	9
222	Equipment Monitor To timing station at Runit to check equipment removed from Aoman for further removal to Albemarle.	WHIPPLE	1520	1530	PPE	1	1	1	1

NOTE: LAJ's 14 party of 4 will stop at CVE at 0830 to pick up necessary equipment. Will not need monitor. Will join LAJ-12 parties already on islands.

T.G. 7.6 MONITOR MISSIONS, 4 MAY 1948

NO.	PARTY	MONITORS	TIME OUT	TIME ISSUE	TRANS	IC	GM	FB	O.2
301	Zero Island Survey Survey of Aoman-Biijiri just along the blast footings. Collection of hot missles to be put in G.I. can - Two Monitors. Routine Mission.	CDR SMITH BLAKEMORE BOLEN	0835	0815		2		2	2
302	BuY&D's Structure Survey Erickson ashore to further plot his structures. Both morning and afternoon. One monitor. Routine Mission with photographer.	FLYNN	0835	0815		1		3	3
303	LAJ-3 Water Cable Party 7 LAJ-3 men at CVE at 0915 to pick up two monitors to remove samples from water cable. Two DUKWs to participate. 580 mr mission.	SPEICHER VENTERS	0915	0900	AV-5 Boat	2	1	11	11 2 chargers
304	VIP Party Adm. Wellings and Col. Cooney to arrive CVE at 0930 for clothing and equipment. To go to Aoman for inspection. On return to CVE to ride helicopter over islands.	COONEY HOUGHTON		0915	AGC-7 Boat	2 (MX-6s)		6	4
305	N.W. Island Perimeter Survey Two monitors pick up DUKWs at CVE about 1000. To survey N.W. Islands. To take SCR-300Os. Routine Mission.	OLDFIELD BARTH		0945	DUKWs and LCM	3	1	?	4
306	S.W. Island Perimeter Survey Two monitors from Eniwetok to S.W. Islands for survey. By DUKW and LCM. Routine mission.	MATHER ELDREDGE	On Station		DUKWs and LCM	Previously issued			

NO.	PARTY	MONITOR	TIME ISSUE	TIME OUT	TRANS	IC	GM	FB	0.2
307	Drone Plane Clearance Work continuing at Eniwetok on decontamination and clearing of drone planes.	PHILLIPS LONG DAUGHERTY	On Station			Previously issued			
308	Ships' Filter Queens To change filters, monitor decks and water in Runit anchorage. To do CVE Evaps at 0800 and 1900	SCHAPPACHER	0900	0845	CVE Boat	-	1	-	-
309	TU 7.6.6 Recovery Party Party to recover more 7.6.6 samples on Aomen - Biijiri	SCOVILLE GAINES	0910	0845		2	1	5	4
311	CVE Duty Monitors Four monitors, two on each shift for decontamination and general monitoring of decks and water from gangway	COOK (A.M.) MASON	0815	0800		-	2	-	-
		MOSS (P.M.) WOY	1200	1145		-	2	-	-
312	IAJ-8 Mission Further recovery of blast data on Aomen - Biijiri one monitor on a 300 mr mission	MORTON	0750	0735		2	-	15	15
313	Plotting Room Watch								

(Standby Monitors)

STONE	WHIPPLE	GOODSELL
COE	WOODS	FRANKS
	ASHLEY	OLIVARI

NO.	PARTY	MONITOR	TIME ISSUE	TIME OUT	TRANS	IC	CM	PB	O.2
314	Jeep Repair Repair of Jeeps on Aoman.	WOODS	1035	1000	LCVP	1	-	3	1
315	Bujoru and Eberiur Survey COR. ANDREWS and instruments party to Lane Duck and nearby islands.	ANDREWS	1430	1400		4	-	4	4
316	Aaranbiro and Piirai Survey COR. SMITH and party to survey the Tico Islands S.E. of Bijiri.	SMITH				2	-	2	2

T.G. 7.6 MONITOR MISSIONS, 5 MAY 1948

NO.	PARTY	MONITOR	TIME OUT	TIME ISSUE	TRANS	IC	CM	FB	O,2
401	Aomen Monitor Guard Two shifts of three monitors each stationed on Biijiri. To distribute film badges to persons working on Aomen. To monitor all personnel prior to leaving Aomen and Biijiri. One monitor to remain at boat landing on Biijiri and maintain security roster. To locate hot misles and place in can on Aomen. Routine Mission.	AM: GOODSELL WHIPPLE ASHLEY PM: OLIVARI FRANKS SPEICHER	0830	0815	LCVP24	2	2	50 (Chargers)	10
402	Zero Island Survey Take readings at all blast footings and locate iso-intensity lines. Two monitors. Routine Mission.	HOUGHTON STONE	0915	0845		1	1	2	2
403	TG 7.1 Photo Party Col. VALENTI and photographic party by CVE at 0830 to pick up monitor and bootees. Routine Mission.	MASON	0915	0815		1	-	7	2
404	Animal Container Recovery CAPT DRAEGER and Shallow water diving gear to go after sunken container. One monitor. Routine Mission. AND Can Diving Operation Diving for biological cans in channel between Aomen and Biijiri. SCOVILLE on routine mission. No monitor required.	SCOVILLE HOFFMAN	0915 0915	0815	DUKW	1 None required	1	7	4

NO.	PARTY	MONITOR	TIME OUT	TIME ISSUE	TRANS	IC	GM	FB	O.2
405	JTF-7 Photo Party Photo party to Biijiri on routine mission. No monitor required. Film badges to be issued to those going to Aomen (only those on control list).	NONE	?		AOC-7 Boat	None required			
406	Eberiru Survey Dr. ANDREWS and party to conduct survey of Eberiru.	ANDREWS	0930	0915	LCVP-24	Equipment from instrument Laboratory.			
407	Ship's Filter Queens To change filters, monitor decks and water in Runit anchorage. To do CVE evaps at 0800 and 1900.	KRAMER	0900	0845	CVE Boat		1		
408	LAJ-8 Mission Further recovery of blast data on Aomen-Biijiri. One monitor on a 300 mr mission.	MONITOR FROM BEACH GUARD			AV-5 Boat	1		?	?
409	CVE Duty Monitors Four monitors, two on each shift for decontamination and general monitoring of decks and water from gangway.	AM: MOSS VENTERS PM: COOK WOODS	0830 1200	0815 1145	None None		2 2		
410	Plotting Room Watch Duty Operations Officer in Air Plot.	AM: COE PM: STONE	0815 1230		None required None required				
411	Standby Monitors Available for unscheduled missions.	GAINES WOY OLDFIELD FLYNN MORTON SMITH BARTH							
412	Neutron Cable removal to Parry Island.	WOY	1030	1015	LCM				

T.G. 7.6 MONITOR MISSION, 6 MAY 1948

NO.	PARTY	MONITOR	TIME OUT	TIME ISSUE	TRANS.	IC	GM	FB	0.2
501	Aoman Monitor Guard Two shifts of three monitors each stationed on Biijiri. To distribute film badges to personnel working on Aoman. To monitor all personnel and equipment leaving Aoman and Biijiri. One monitor to remain on causeway and one at Biijiri landing. The later to maintain security roster. To locate hot missles and place in case at Aoman. Routine Mission. To monitor for parties working on Aoman not previously assigned a monitor.	AM: MOSS MORTON BARTH PM: ROSSANO HELGESTAD CULLEN	0815 1200	0800 1130		2 2	2 2	50 3	10 (Charger) 10 (Charger)
502	CJTF-7 Photo Party Party of 25 photographers via CVE for booties, film badges, gloves and a monitor. To do photographic work on Aoman and Biijiri. To receive monitor assistance from beach guard. Routine Mission.	WOODS	0900	0830	AGC-7 Boat	1	-	28	5
503	Aoman Helicopter Flights Two helicopters for Bowman, Holloway and two monitors at 0900 to fly over Aoman. Routine Mission	SMITH GOODSELL WHIPPLE	0900	0830	Heli-copter (MX-6's)	2	-	6	2
504	Zero Island Survey Take readings at all blast footings and locate all iso-dose lines, 1000, 500, 100, 50, 25, 12½ and 4 mr/hr. Routine Mission.	ELDREDGE GAINES	0900	0845		1	1	2	2

T.G. 7.6 MONITOR MISSIONS, 6 MAY 1948 (CONT'D)

NO.	PARTY	MONITOR	TIME OUT	TIME ISSUE	TRANS.	IC	GM	FB	O.2
505	Biological Recovery Party Capt. Draeger and party on biological collection on islands between Rogoa and Runit. Routine Mission. All day oper.	O'LEARY	0830	0815		-	1	4	2
506	AV-4 Recovery Party Hopkins, Scroggs and Hatch and 9 men from Curtiss on Aoman and Biijiri to recovery electronics gear. One monitor on routine mission. To meet party on Biijiri at 0900 with film badges, booties and gloves. Routine Mission.	BEACH MONITOR	0815	0800		1	1	14	2
507	Tree Damage Party Langer, monitor and working party board a DUKW at CVE about 0900 to go to islands in vicinity of Aoman to collect tree specimens. Routine Mission.	PIERCE	0900	0845	DUKW	1	1	7	2
508	Ships Filter Queens To change filters and monitor decks and water in Runit anchorage. To do CVE evaps at 0800 and 1900. Routine mission.	SCHAPPACHER	0900	0845	CVE Boat	-	1	-	-
509	CVE Duty Monitors Monitors for decontamination and general monitoring of decks and water from gangway. One monitor on duty at all times, the other two be available for call at rush times.	MATHER STEED MCDONNEL	0800-1100 1100-1400 1400-1700		None	-	1	-	-

[redacted]

T.G. 7.6 MONITOR MISSIONS, 6 MAY 1948 (CONT'D)

NO.	PARTY	MONITOR	TIME OUT	TIME ISSUE	TRANS	IC	GM	FB	O.2
510	BuY&D's Structure Survey Erickson, Woy, Nuckel, and Flynn to Aoman and Biijiri to plot BuY&D's structures. Nuckel on Biijiri Only. Routine Mission.	WOY FLYNN	0815	0800		1	1	4	4
511	Lame Duck Recovery	ASHLEY	0900	0845	-	-	1	1	1
512	Plotting Room watch	OLDFIELD AM: COOK PM: VENTERS	0815	-	None	None required			
513	Standby Monitors Monitors available for call.	MASON ASHLEY OLIVARI SPEICHER							

MONITOR MISSION FOR 7 MAY 1948

No.	Party	Monitor	Time Out	Time Issue	Trans.	IC	CM	FB	0.2
601	Aoman Monitor Guard Two shifts of three monitors each stationed on Biijiri. To distribute film badges to personnel working on Aoman. To monitor all personnel and equipment leaving Aoman and Biijiri. One monitor to remain at causeway and one at Biijiri boat landing, the latter to maintain security roster of all personnel ashore. To locate hot missiles and place in can on Aoman. To monitor for parties working on Aoman not previously assigned a monitor routine mission.	AM: FRANKS BARTH VENTERS PM: OLIVARI SPEICHER WOODS	0815 1200	0800 1130		2 2	2 2	50 3	10 (Charger) 10 (Charger)
602	Engebi Recovery Mission Scoville and Hoffman to Engebi to recover concrete shields. To take readings at all blast footings and for each 100 yds. from last blast footing into the tower footings. Routine Mission.	SCOVILLE HOFFMAN	0900	0815		1	1	2	2
603	Biological Recovery Party Capt. Draeger to Biijiri to dive for biological samples cans near causeway. No monitor. Routine Mission.	NONE	0900	—		None Required			
604	Zero Island Survey Cdr. Wimant and Col. Isbell to take readings at all blast footings and each 100 yds. from the last blast footing into the tower if intensities permit. Routine Mission.	WINANT ISBELL	0930	0845		1 (red top)	1	2	2

MONITOR MISSION FOR 7 MAY 1948

No.	Party	Monitor	Time Out	Time Issue	Trans.	IC	GM	FB	0.2
605	TG 7.1 VIP Party Dr. Clark and a party of about 25 VIPS at CVE at 1330. To pick up monitors, film badges, bootees and dosimeters for all. To transfer to DUKWs at CVE and go to Aoman and Biijiri.	SMITH BOSSANO	1330	1300		1	-	28	28
606	CVE Duty Monitors Monitors for decontamination and general monitoring of decks and water from gangway. One monitor on duty at all times. The other two to be available for call at rush times.	GOODSELL ELDREDGE GAINES	0830 —— 1130 1130 —— 1430 1430 —— 1730		NONE	-	1	-	-
607	Ships' Filter Queens Replace filter and stop operation on AV-4, AV-5, and AGC-7. Operation to continue on CVE. To monitor CVE evaporators at 0800 and 1900.	SCHAPPACHER	0900	0845	CVE boat	None Required			
608	Plotting Room Watch Coe in charge with assistants.	COE MOSS (AM) ASHLEY (PM)	0815		NONE	None Required			
610	Standby Monitors Monitors available for call.	FLYNN HELGESTAD MATHER OLIVARI	STEED MORTON MASON						

No.	Party	Monitor	Time Out	Time Issue	Trans.	IC	CM	FB	0,2
611	Helicopter Monitor To accompany Capt. Harris in a flight over Aoman and Biijiri.	DR. WHITE	0900	0815		1 (MX-6)	-	3	3
612	BuY&D Photo Party Photograph(y) of BuY&D's structures on Aoman and Rojoa. Routine Mission. Erickson, DeBardeleben photographer, and monitor.	WOY	0815	0800		1	-	4	4
613	Runit Winch Check Remonitoring of land Cable Winch at Runit which was removed from Biijiri.	WHIPPLE STONE	0840	0830	PPB-1	1	1	10	5
614	TG 7.1 Party to Aoman	MATHER KING	1400	1400	Boat	2	-	22	-
615	Film Badge Recovery on Aoman	VICARS							

MONITOR MISSION FOR 8 MAY 1948

No.	Party	Monitor	Time Out	Time Issue	Trans.	IC	GM	FB	0,2
701	Aoman Monitor Guard One shift of three monitors and one of two each stationed on Biijiri. To distribute film badges to personnel working on Aoman. To monitor all personnel and equipment leaving Aoman and Biijiri. One monitor to remain at causeway and one at Biijiri boat landing, the latter to maintain security roster of all personnel ashore. To monitor for parties working on Aoman not previously assigned a monitor. Routine Mission.	AM: STONE FLYNN MASON	0815	0800		2	2	50	10 (Charged)
		PM: STEED BABCOCK	1200	1130		2	2	3	10 (Charged)
702	Helicopter Mission Monitor to accompany Maj. Dauer to Aoman in helicopter.	KLDREDGE	0845	0830		1		3	3
703	Helicopter Mission Monitor to accompany Dr. Shonka to Aoman in helicopter.	MENZER	0845	0830		1		3	3
704	T.U. 7.6.6 Party One monitor to accompany LCDR Langer and party of 4 plus boat crew to islands north of Aoman. Do not take lunch.	PIERCE	0830	0800	LCVP	1	1	10	10
705	LAJ-5 One monitor to accompany LAJ-5 party of 10 to GEESE.	ROSSANO	1500	1330		1	1	11	11

MONITOR MISSION FOR 8 MAY 1948

No.	Party	Monitor	Time Out	Time Issue	Trans.	IC	GM	FB	O.2
706	CVE Duty Monitors Monitors for decontamination and general monitoring of decks and water from gangway. One monitor on duty at all times. The other to be on call at rush times.	MORTON CULLEN SHEPPARD	0830 1030 1300	1030 1300 1730	NONE		1		
707	Ships Filter Queens Replace filter on CVE. Monitor evaporators at 0800 and 1900.	SHAPPACHER		0845	NONE	None Required			
708	Plotting Room Watch Sheppard in charge.	SHEPPARD OLIVARI (AM) O'LEARY (PM) MATHER			NONE	None Required			
709	Standby Monitors								

MONITOR MISSIONS FOR 9 MAY 1948

No.	Party	Monitor	Time Out	Time Issue	Trans.	IC	GM	FB	0.2
801	Aoman Monitor Guard Two shifts of two monitors each stationed on Bijiiri to distribute film badges to personnel working on Aoman. To monitor all personnel and equipment leaving Aoman and Bijiiri. One monitor to remain at causeway and one at Bijiiri boat landing. The latter to maintain security roster of all personnel ashore. To monitor for parties working on Aoman not previously assigned a monitor. Routine Mission.	HELGESTAD (AM) GAINES PIERCE (PM) MATHER	0815	0800		2	2	50	10
802	VIP's To Aoman About 100 technicians to visit Aoman. Will arrive at Aoman after 1000 on LCI 1090 and LCI_____. Monitor will leave in boat by 0830 and will proceed to landing on Bijiiri to meet this party. They will issue and assignment of monitors to party will be supervised by senior monitor. Senior monitor to report to LCI 1090 to OinC. and explain issue procedure and proper precautions. All personnel to be cleared before leaving islands and doubtful cases to be brought back to CVE.	STONE KIMBEL COOK WOY SPEICHER	0815	0800	CVE Boat	5	-	5	5

MONITOR MISSIONS FOR 9 MAY 1948

No.	Party	Monitor	Time Out	Time Issue	Trans.	IC	GM	FB	O.2
803	CVE Duty Monitors Monitors for decontamination and general monitoring of decks, and water from gangway. One monitor on duty at all times. The other to be on call at rush times.	BARTH BABCOCK ASHLEY	0830 1030 1300	1030 1[illegible] 1[illegible]			1		
804	Ship's Filter Queens Replace filter on CVE. Monitor evaporators at 0800 and 1900.	SCHAPPACHER		0845		None Required			
805	Plotting Room Watch Sheppard in Charge.	OLDFIELD (AM) COE (PM)							
806	Standby Monitors								

MONITOR MISSION SCHEDULE FOR 10 MAY 1948

No.	Party	Monitor	Time Out	Time Issue	Trans.	IC	GM	FB	0.2	10.0
901	Acman Monitor Guard	MOSS (AM) VENTERS	0815	0800		2	2	50	10	
		ELDREDGE (PM) MORTON	1200	1130		2	2	3	10	
902	Tank Recovery Party Dr. Bowman to arrive by LCM with party of 10 to salvage tanks. He will proceed to island direct Monitors will meet party at landing.. 500 mr mission.	SHEPPARD ROSSANO STEED WOODS	0815	0800		3		16	16	16
903	CVE Duty Monitors	SMITH 0830 - 1030 FRANKS 1030 - 1300 FLYNN 1300 - 1700								
904	Ship's Filter Queens To collect all filter Queens for servicing.	SCHAPPACHER		0845		None Required				
905	Plotting Room Watch Oldfield in charge	SPEICHER (AM) WOY (PM)								
906	Party to Acman and Biijiri to collect stakes.	COE				1	-	2	2	
	Standby Monitors:	ASHLEY BARTH COOK GAINES HELGESTAD MATHER CULLEN								
907	Party to Engebi	BABCOCK	1310	1245		1	1	4	2	-

MONITOR MISSION SCHEDULE FOR 11 MAY 1948

No.	Party	Monitor	Time Out	Time Issue	IC	CM	FB	0.2	10.0
1001	Aoman Monitor Guard	AM: BARTH WOODS	0815	0900	2	2	50	10	
		PM: SPEICHER DAUGHERTY	1200	1130	2	2	3	10	
1002	Crater Survey Party Group with Dr. White to survey crater. 200 mr mission.	MATHER WOY CULLEN FLYNN FRANKS GAINES	0815	0800	7		7	7	7
1003	Technical Mission Capt. Barnes with total of 3 officers and 3 EM to come by BAIROKO at 0840 for monitor to Aoman.	OLDFIELD	0840	0815	1	1	8	8	
1004	Meeting of T.G. 7.6 All Officers of T.G. 7.6 to assemble in Forward Ready Room at 1315.	All T.G. 7.6 Officers							
1005	CTE Duty Monitors	COE 0830 - 1030 ROSSANO 1300 - 1700							
1006	Plotting Room Watch Sheppard in charge.	AM: GOODSELL PM: STEED							
1007	T.G. 7.6.6 Army DUKW from Runit to meet Dr. Scoville for work on Elaine 0830.	DR. SCOVILLE	0830		1	1	3	3	

MONITOR MISSION SCHEDULE FOR 12 MAY 1948

No.	Party	Monitor	Time Out	Time Issue	IC	CM	FB	0.2	10.0
1101	Aoman Monitor Guard	AM: BABCOCK MATHER	0815	0800	2	2	10	4	
		PM: COE KIMBEL	1200	1130	2	2	2	4	
1102	Reconnaisance on Runit Check runit by 2 plus 1 survey party.	COE GOODSELL	0830	-	None Required				
1103	Current Survey To survey currents off Runit with LCVP. Take SCR 300 and flourescence dye.	SPEICHER	1330	1315	None Required (SCR 300)				
1104	Lagoon Sounding Take deep sea lead with 60 70 feet line from ship's boatswain, and check lagoon bottom of crater on Aoman for active material.	FLYNN	0830	0815	1	1	1	1	
1105	Lame Duck Party To anchor Lame Duck off Runit. Take SCR 300 radio.	Cdr. ANDREWS LCdr. OLDFIELD Lt. CULLEN Mr. MURPHY	1400	—	-	1	4	4	-
1106	Plotting Room Watch An afternoon watch will place SCR 300 and party on bridge for communication with survey and Lame Duck Party. Radar will track. Sheppard in charge.	AM: FRANKS PM: FLYNN		NONE REQUIRED					
1107	Zugebi Demolition Buris from AV-5 and party of 6 pick up monitor at 0915.	VENTERS	0915	0900	1	1	9	9	9

MONITOR MISSION SCHEDULE FOR 13 MAY 1948

No.	Party	Monitor	Time Out	Time Issue	IC	GM	FB	0.2	10.0
1201	Engebi Demolition Boat from AV-5 and party of eight pick up monitor at 0915.	MATHER	0915	0900	1	1	9	9	9
1202	7.6 VIP Party VIP Party to visit craters at Aomen and Engebi. To collect concrete samples from tower footings.	STONE	0830	0815	1	1	4	4	
1203	AOC-7 Party Party in DUKW's to go to Aomen. To furnish one monitor and equipment.	NONE	0900		NONE				

[redacted]

OPERATIONS SCHEDULE FOR Z-3 DAY AND EARLIER

RADSAFE PARTY NO.	TIME	MONITORS	TRANS.	MISSION NO.	OPERATION
10	Z-4	LT O'LEARY	On station with LST 219	B	On station at Ujelang with LST 219 as monitor. To return by plane via Kwajalein on Z plus 2.
19		ETC MADELANN	On station	A	At Kwajalein as instrument repairman-Remain until Z plus 7.
12	0730 Z-3	LCDR ELDREDGE (DDR-875 Tucker)	LCI (Ferry Able)	C	Transfer to U.S.S. TUCKER from CVE as DD monitor. To return on Z plus 4
12	0730 Z-3	CAPT GAINES (DE-696 Spangler)	LCI (Ferry Able)	D	To GARDNERS BAY for transfer to U.S.S. SPANGLER as DD monitor. To return on Z plus 4.
12	0730 Z-3	LT WOY	LCI (Ferry Able)	E	To GARDNERS BAY for transfer to U.S.S. GEORGE as DD monitor. To return on Z plus 4.
20	Daily at 0845 prior to Z-2	LTCOL HOUGHTON CAPT MALLORY LT PHILLIPS YNC HARMON	CVE-Boat	F	To man RadSafe Center on AGC-7. Remain on AGC-7 after Z-2.

[redacted]

[redacted]

OPERATIONS SCHEDULE FOR Z-2 DAY

RADSAFE PARTY NO.	TIME	MONITORS	TRANS.	MISSION NO.	OPERATION
19	0800	ET1 SCHLPPACHER		G	To ARC-7, AV-4, AV-5 and CVE-115 to service filter queens.
19	0800 1700	DR. SCOVILLE CDR HOFFMAN CDR ANDREWS LT VICARS ME3 PEARSON	LCVP	H	To zero island to prepare Test equipment for detonation.
19	0900	CDR ANDREWS MR. SEIGEL	LCVP	I	To test LCM (LAME DUCK) and return.
2 8 24 16 15	1300	LCDR VANDERGRIFT ENS ASHLEY M/SGT LONG 1ST/SGT WILSON RM2 HALL LT PIERCE LT BABCOCK LT VENTERS CAPT FRANKS LT WOODS RM2 RUBIRO	LCM (DETONATION ZERO)	J	Via LCM to Eniwetok and various monitor missions during test. Upon arrival of LCM at Eniwetok, LCM to report to boat pool and boat crew to U.S.S. COMSTOCK. LCM delivers LT BABCOCK to U.S.S. PASIG (AW-3). Deliver CAPT FRANKS and LT WOODS to U.S.S. GARDINERS BAY (AVP-39)
9	1400	MAJ ROSSANO	PPB	K	To AV-5 as topside monitor.
22	1430	DR. WHITE DR. DONALDSON	LCI & PPB	L	VIPs arrive Roman via LCI and are transferred to CVE.
18	1900	MAJ MC DONNEL DR. WHIPPLE	PPB	M	To AV-4 to spend night and participate as disaster party on Z-1 operations.

[redacted]

UNCLASSIFIED

[redacted]

OPERATIONS SCHEDULE FOR Z-1 DAY

RADSAFE PARTY NO.	TIME	MONITORS	TRANS	MISSION NO.	OPERATION
18	0530	Maj. McDonnel Dr. Whipple	AV-4 Boat	N	Whipple and McDonnel from AV-4 to ZERO island. Proceed to tank revetment and remain there until 1130. TG 7.1 vehicle will be available for their use.
21	0800	~~Dr. Seeville~~ Cdr Hoffman ~~Cdr Andrews~~ Lt Vicars	LCVP	O	T.U. 7.6.6 party to ZERO island place film badges, biological samples and start collective protector.
22	0830-1100	~~Dr. White~~ Dr. Donaldson	PPB	P	To AGC-7 for VIP briefing.
21	0900	Cdr Andrews Mr. Seigel	LCVP	Q	To test LCM (LAME DUCK) to start collective protector and cascade impactors.
	1030	Cdr Winant	PPB	R	To AGC-7 to attend staff conference.
21	1045	Cdr Andrews Mr. Seigel	PPB	S	From LCm (LAME DUCK). To CVE with Andrews and Seigel.

[redacted]

UNCLASSIFIED

OPERATIONS SCHEDULE FOR Z-1 DAY (CONT'D)

RADSAFE PARTY NO.	TIME	MONITORS	TRANS.	MISSION NO.	OPERATION
21 18	1145	DR. SCOVILLE CDR ANDREWS CDR HOFFMAN LT VICARS MAJ MC DONNEL DR. WHIPPLE TG 7.6 Jeep	LCVP	T	Returns TU 7.6.6 party to CVE with MAJ MC DONNEL and DR. WHIPPLE from disaster party. Jeep placed on LCVP prior to 1100. On return LCVP and jeep brought aboard CVE, via AGC-7, where DR. SCOVILLE is debarked.
	1300	CDR WINANT	PPB	U	Returns WINANT from staff conference on AGC-7 to CVE. On return PPB brought aboard CVE.
1.	1300	LCDR KING	ATC C-47	V	Arrives Eniwetok from Kwajalein to remain after detonation as C-47 RadSafe survey plane monitor.
4. 5. 3.	1600	CAPT BOLEN MAJ STONE MAJ MOSS M/SGT DAUGHERTY CAPT STEED MAJ COOK	AV-5 Boat or TG 7.6 Boat	W	Party for Parry and AVR's picked up from CVE at 1600 and taken to Parry Island. Monitors to proceed from Parry on various assignments.

UNCLASSIFIED

[redacted]

OPERATIONS SCHEDULE FOR Z DAY

BADSAFE PARTY NO.	TIME	MONITORS	TRANS	MISSION NO.	OPERATION
4	0400	Capt. Bolen Maj. Stone Maj. Moss M/Sgt Daugherty	AVR-38	X	Board AVR-38 on return of this boat to Parry Island
5	0400	Capt. Steed	AVR-53	Y	Board AVR-53 on return of this boat to Parry Island. Remain on board for air/sea rescue.
	H (approximate time of detonation)				
4	H plus 10 min.	Capt Bolen Maj. Stone Maj. Moss M/Sgt Daugherty	AVR-38	Z	Leave Parry Island for ZERO Island. Arrival about 0600.
				AA	M/Sgt Daugherty remains aboard AVR-38
				~~AB~~	~~Monitor land cable winch.~~
				AC	Monitor operation at Gamma stations. B & A.

[redacted]

UNCLASSIFIED

[redacted]

OPERATIONS SCHEDULE Z DAY (Cont'd)

RADIAPE PARTY NO.	TIME	MONITORS	BOAT	MISSION NO.	OPERATION	PRIORITY
7	H plus 10 min.	Capt. Kimbel Capt. Helgestad	Heli copter	AD	In helicopter to take-off from CVE and land on Zero Island near winch	U
				AE	Clear landing of other helicopters.	
				AF	Monitor for land cable party. Return to CVE-115 by LVT# 38.	
8	H plus 20 min.	Lt. Pierce	Photo. boat	AG	Leave Eniwetok for Coral Head Photo Tower to assist in recover of film and return to Eniwetok, to return in afternoon to Coral Head for roll-up.	U
1	H plus 30 min.	LCdr King	C-47	AH	C-47 mission starts aerial survey on orders of Commander Air Forces. (Big Ben)	R
2	H plus 2 hr.	LCdr Vandergrift Ens. Ashley 1ST.SGT Mason M/SGT Long	None	AI	Monitor drone planes upon landing at Eniwetok. Filter units removed and disposed of by LAJ-2 personnel. Clear island.	U
				AJ	Watch for fall-out.	

[redacted]

UNCLASSIFIED

[redacted]

OPERATIONS SCHEDULE Z DAY (Cont'd)

RADSAFE PARTY NO.	TIME	MONITORS	BOAT	MISSION NO.	OPERATION	PRIORITY
6	H plus 3 hr.	Lt. Cullen Cdr Slaydon	LCM (Tank)	AE	Board LCM from CVE proceed to Zero Island. LCM beaches near tank revetment. (Bowman flies in helicopter from Eniwetok to Aomen on completion of drone filter removal.)	U
			(AEC Boat)	AL	Cdr Slaydon returns to CVE by boat with crater sample to CVE-115.	
				AM	Lt Cullen returns with crater samples to Eniwetok.	
				AN	After samples are placed in storage at Eniwetok Lt Cullen returns to CVE.	
25	H plus 3 Hr.	LCdr Oldfield		AO	Monitor in second helicopter, monitoring for tank guiding helicopter.	U
9	H plus 1 to H plus 4	Maj. Rossano		AP	Monitor landing by helicopter, and boat of samples from Zero Island on AV-5.	U
11	H plus 1 and later	Maj. Brennan Maj. Mathur		AQ	Monitor returning helicopters, personnel, and land samples on CVE.	R

[redacted]

[redacted]

OPERATIONS SCHEDULE Z DAY (Cont'd)

RADSAFE PARTY NO.	TIME	MONITORS	BOAT	MISSION NO.	OPERATION	PRIORITY
16	H plus 20 min.	Lt. Venters	L-5	AR	Surveys Aniyuami by L-5 from Eniwetok. Three (3) L-5's, in company recovers technical films from Aniyuami Photo Tower. Monitor remains on Aniyuami with one (1) L-5 for LCM for photo roll-up at H plus 4 hour.	U
13	When directed by CTG 7.6	Lt. Speicher Maj. McDonnel	Bumstead able Bumstead Baker	AS	Lagoon re-entry patrol to debark and precede CVE-115 into Runit Anchorage. One boat on each side, 1500 yards off the bow.	R
13	When directed by CTG 7.6	Cdr Ponick Cdr Smith	Joist able Joist Baker	AT	Lagoon re-entry patrol. Accompany CVE and after anchoring patrol to N and NW of Runit in area of possible fall out.	R
23	H plus 2 hr.	Maj. Goodsell Lt. Flynn	Joist [redacted] Baker to AVR	AW	LCM-4 and LCM-5 mission to timing station and Gamma B stations from CVE.	
4	H plus 4 hour	Maj. Stone Maj. Loss Capt. Zirbel Capt. Bolen Capt. Helgestad M/Sgt Daugherty	AVR # 38	AV	M/Sgt Daugherty remains aboard AVR # 38 and accompanies it for air/sea rescue.	
	H plus 4 hour	Cdr. Andrews	Bumstead A		To Lame Duck and return	

[redacted]

UNCLASSIFIED

[redacted]

OPERATIONS SCHEDULE (Cont'd)

RADSAFE PARTY NO.	TIME	MONITORS	BOAT	MISSION NO.	OPERATION	PRIORITY
23	H Plus 4 Hr.	Maj Goodsell Lt. Flynn	AVR	AX	Return to CVE from AAJ-4 & LAJ-5 mission to zero island.	
	1300	TU 7.6.6			To Bunit to recover badges	
9	1600	Maj. Rossano	CVE Boat	AY	Return to CVE from AV-5.	
16	1600	Lt Venters	Dalmation	AZ	Return to CVE by Dalmation. from Eniwetok personnel landing via Parry Island landing. Leaves Eniwetok not later than 1600.	
8		Lt Pierce (if possible)				
6		Lt Cullen				
13	1300	Cdr. Smith	Joist B		Recheck Lagoon Survey	
3	1600	Maj Cook	Dalmation Zero	BA	Return to CVE by Dalmation from Parry Island.	
5	1600	Capt Steed MSGT Daugnerty		BB BC	Return to CVE from AVR#53 and AVR#38 after securing of air/ sea rescue deatail.	

- 64 -

[redacted]

UNCLASSIFIED

[redacted]

OPERATION SCHEDULE Z PLUS 1 DAY

RADSAFE PARTY NO.	TIME	MONITORS	BOAT	MISSION NO.	OPERATION	PRIORITY
101	0830	Ldr Coe [redacted] Maj Goodsell Lt. Pierce	LCVP	BD	Survey operations on Runit.	R
26	0700 1700	Maj Sheppard Maj Stone [redacted] Lt Nuckel Cdr. Fonick	None	BE	CVE Operations Group.	

[redacted]

MONITOR MISSION SCHEDULE FOR 16 MAY 1948

No.	Party	Monitor	T' Out	Time Issue	IC	CM	FB	0.2	10.0
101	Island Survey	COE GOODSELL PIERCE	0830	0815	3	1	3	3	
101A	Island Survey	WINANT PARSONS	0830	0815	1 MX-6 1 MX-5		2	2	
102	Lagoon Patrol	MATHER	0845	0830	1	1	1	1	
103	LAJ-4 Water Cable	VENTERS	1300	1245	2	1	2	2	2
104	LAJ-3	COOK	1300	1245	1		3	3	
105	[illegible] Duty ([illegible] day)	CULLEN STEED KIMBEL	0830	0830		3			
106	Gamma "B" (King) (300mr)	PHILLIPS	1230	1215	1	1	6	6	
107	LAJ-8 (300mr)	SMITH ROSSANO MORTON SPEICHER PONICK	1230	1215	6	2	32	32	6
108	Mr. Cloud	FLYNN	1300	1245	1	1	4	4	
109	Donaldson	MALLORY	0900	0830	1	1	3	3	
110	Ship's filter queens	SCHAPPACHER	0900	0830		1			

MONITOR MISSION SCHEDULE FOR 17 MAY 1948

No.	Mission	Monitors	Trans	Time Out	Time Issue	IC	CM	FB	0.2	10.0
201	Runit Monitor Guard To establish Beach Pad-Safe center at Personnel Landing on Runit. Ware island survey in AM.	AM: COE CULLEN GOODSELL COOK	LCVP	0830	0815					
202	LAJ-8 Party 12-14 men in AV-5 LCVP will come by CVE for monitor. 300 mr mission.	BEACH MONITOR	AV-5	1230	1215	1	1	15	15	4
203	Engineer Party Mr. Allen with unknown number of engineers to photo tower in lagoon. Take lunch and water.	BABCOCK	Eng. Boat	0915	0900		1	10	10	
204	Helicopter Flight Survey of NW Island	SMITH FONICK		0830	0815	2	2	3	3	
205	NE Perimeter Survey.	STONE VENTERS	LCM	0830	0815	2	2	2	2	
206	Lagoon Survey To check lagoon water between CVE and Zero Point	BARTH	LCVP	0845	0830		1	2	2	
207	Film Badge Recovery To accompany VICARS	FLYNN		0830	0815	1		2	2	
208	Filter Queen To check Fe and evaporators on CVE, AV-4, AV-5, AOG-7.	SCHAPPACHER		0830		None Required				
209	Badops. To maintain records and stand watch in Badops.	MATHER BOSSANO				None Required				
210	CVE Monitors	KIMPEL MORTON STEED			STANDBY MONITORS:			PHILLIPS SPEICHER OLDFIELD		
211	Photo Party	PHILLIPS								

MONITOR MISSION MAY 18, 1948

No.	Mission	Monitors	Trans.	Time Out	Time Issue	IC	CM	FB	0.2	10.0
301	Runit Monitor Guard Make island survey in AM assist Shonka's photo party arriving 0900. LAJ-14 party arrive is about 0900.	AM: MATHER BABCOCK PM: KING McDONNEL		0830	0815	3 -	2 -	25 2	15 2	-
302	LAJ-5 Party 5 LAJ-5 men arrive CVE at 0830 for monitor.	VENTERS		0830	0815	1	1	7	7	-
303	N.E. Perimeter Survey 2 LCMs arrive at 0900 with DUKWs and drivers. Survey islands from Aitsu thru Piivasi, skipping Ebariru and Aomen. Take water canteens.	GOODSELL		0900	0845	2	2	8	8	-
304	AV-5 Movies Act for McDonnel's movie on AV-5. Clear AV-5 radiologically.	ROSSANO		0830	0815	-	1	-	-	-
305	CVE Monitors	STONE CAMPBELL								
306	Ship Clearance Proceed to COMSTOCK. LCVP's will be furnished there for trans. to ship assigned. Clear in accordance with instr.	ASHLEY HELGESTAD PHILLIPS OLDFIELD CULLEN MORTON	LONG SPEICHER KIMBALL COOK FLYNN PIERCE	0800	0815	1 CM per man.				
307	Plotting Room	SHEPPARD								
308	Check evaps and roll-up filter queens if there is no evidence of fall-out on ACC-7, AV-4, AV-5, CVE-115.	SCHAPPACHER				1 CM				
309	Monitor Guard Night	O'LEARY								

SECRET

SHIP CLEARANCE

PARTY #1	ASHLEY	COMSTOCK	M1.5
	HELGESTAD	PICKAWAY	P3.5
	PHILLIPS	ASPARI	M2
	LONG	TUCKER (DD-875)	E5
		PERKINS (DD-877)	L6
PARTY #2	OLDFIELD	CURTISS (AV-4)	O5
	CULLEN	MISPILLION (AO-105)	O.6
	MORTON	SPANGLER (DE-696)	Q6
		ROGERS (DD-878)	B6
		RABY (DE-698)	118
PARTY #3	COE	YANCY (AKA-93)	Q2
	KIMBALL	LST45	B4
	SPEICHER	LSM 378	Q4
		LCI 1054	Q3
		FS 370	P2
		LCI 549	O3
		LCI 1090	P2
		YW 94	N3
		YOG 64	P1
PARTY #4	COOK	GARDINERS BAY	B1
	FLYNN	LSM 25	Party
	PIERCE	AVR 38	Party
		AVR 53	Party
		PERKINS (DD-877)	L6
		TUCKER (DD-875)	K5

CC: Issue Desk (5)
Maj. Sheppard (3)

MONITOR MISSION FOR 19 MAY 1948

No.	Party	Monitor	Time Out	Time Issue	IC	GM	FB	0.2	10.0
401	Runit Monitor Guard	AM: WOY VENTERS PM: ELDREDGE BABCOCK	0830 1200	0815 1145	-	-	-	-	-
					All equipment needed is at Beach Center				
402	Bowan and Allan Helicopter Mission.	PHILLIPS FLYNN	0900	0845	2	2	4	4	4
403	Helicopter Mission	KING	1000	0945	1	1	2	2	2
404	Crater Survey To survey Zero Island vicinity of crater on four lines starting from point near zero tower.	COE SPEICHER MORTON PIERCE	0830	0815	4	-	4	4	4
405	CVE Duty Monitor One monitor to be where he can be called from issue desk.	KIMBEL CULLEN				1			
406	Air Plot Watch	STONE (AM) _____ (PM)			None Required.				
407	Helicopter Photo Mission	HOUGHTON MCDONNEL				1	4	4	
408	Night Monitor Guard	ELDREDGE							

[redacted]

PARTY #1	WOY	COMSTOCK (LSD-19)	M1.5
	FRANKS	PICKAWAY (APA-222)	P3.5
	ASHLEY	ASKART (ARL-30)	M2
PARTY #2	OLDFIELD	CURTISS (AV-4)	O5
	CULLEN	SPANGLER (DE-696)	Q6
	MORTON	MISPILLION (AO-105)	Q6
		CURRIER	
		ROGERS (DD-878)	R6
PARTY #3	COE	RABY (DE-698)	118
	VENTERS	YANCY (AKA-93)	Q2
	SPEICHER	LST 45	R4
		LSM 376	Q4
		LCI 1054	Q3
		LCI 1090	P2
		PASSIG (AW-3)	
PARTY #4	COOK	PS 370	P2
	FLYNN	LCI 549	Q3
	MATHERS	YW 94	N2
		YOG 64	P1
		GARDINERS BAY	B1
		LSM 250	Party
		AVR 38	Party
		AVR 53	Party
		GEORGE (DE-697)	
		MARSH (DE-699)	
PARTY #5	ROSSANO	ALBEMAR (AV-5)	
	WOODS	MT MCKINLEY (AOC-7)	
	PHILLIPS	PERKINS (DD-877)	L6
		TUCKER (DD-875)	K5
CVE	ELDREDGE		
SPARE	O'LEARY		

[redacted]

281

[redacted]

ANNEX II

PHOTOGRAPHIC ACTIVITIES

Introduction.

The documentary photography of Joint Task Force SEVEN was under the direct supervision of Brigadier General (then Colonel) Paul T. Cullen. In order to insure adequate and accurate photographic coverage of Task Group 7.6 activities a liaison officer, Major G. M. McDonnel, was designated on 27 February 1948 to assist in documenting the task group activities. Attempts to establish liaison before debarkation from Terminal Island were unsuccessful since General Cullen was in Washington, D. C. However, a telephone conversation with Major Robert T. Elliot, of General Cullen's staff, did establish the fact that a photographic crew would be assigned to cover Task Group 7.6 activities throughout the operation and that this crew would be billeted aboard the USS BAIROKO. Major Elliot also stated that he would provide photographic equipment aboard the BAIROKO between Terminal Island and Pearl Harbor.

A conference with Herbert I. Miller of Los Alamos Scientific Laboratory, the documentary and classification officer of Joint Task Force SEVEN, revealed that the Atomic Energy Commission desired accurate and complete coverage of all TG-7.6 activities. Sufficient movie film and film packs would be available to complete the mission and provide for a two hour documentary film. It was also established that the Armed Forces Special Weapons Project would have the film available for use in a training film providing AEA security regulations were not breached. It was also determined that there would be a "still" photographer aboard the BAIROKO while enroute to Pearl Harbor and that this photographer had a "Q" clearance pending. This automatically limited the amount of information which he could document by photography.

Material Covered by Photography.

This photographic crew covered all radiological safety activities of JTF-7 with additional coverage of the technical measurements section of TU-7.6.6. In general the material covered can be grouped into the following:

1. Classroom instruction of the personnel of TG-7.6. This sequence was covered on the flight deck of the BAIROKO.

2. Instrument Shop aboard BAIROKO.
   This sequence includes the breakdown and servicing of the radiation survey instruments used in the operation.

3. Measurement of activity of crater sample.
   This sequence shows the actual counting procedure of a crater sample and the recording of a decay curve of the material investigated.

[redacted]

[redacted]

4. Measurement of activity of a radioactive sample.
This sequence shows the placing of a sample in a counting chamber, the action of a scaler, and the recording of results obtained.

5. Procedure for calibration of instruments on the flight deck of the BAIROKO.
This sequence shows in detail the procedure used in the calibration of the portable instruments used in the operation. It includes the placing of the source at the ZERO point, it shows the marking of distances from the source, the monitors receiving instruction as to proper procedures, and the procedure of the monitors in calibrating the portable radiation survey instruments.

6. Placing of film strips in the Bureau of Yards and Docks structures on the ZERO island.

7. Location and placement of braces for BuMed containers on ZERO island. This sequence also shows the containers in place.

8. Assembly and installation of both a cascade impactor and a collective protector in an OCE structure on ZERO island.

9. Lagoon reentry survey boats from the BAIROKO.

10. Bridge of BAIROKO operations on X-RAY day.

11. Monitor survey of Engebi.

12. Removal of films from BuShips structures. Removal of BuMed containers and samples after X-RAY shot.

13. Monitor briefing and equipment aboard BAIROKO. This sequence shows briefing of monitor issue of clothing, issue of instruments, film badges and do[illegible]ters. Details of the disposable clothing is also included. Included also is the return of the monitors after the completion of a mission.

14. Alpha photographic plate analysis.

15. RadOps room on BAIROKO.

16. Island survey.
This sequence shows the monitor operation of Engebi after the detonation. It includes their arrival by LCM, operations, reporting of results, and departure from island.

[redacted]

17. Film badge sequence.
This shows the receipt of exposed film badges, their processing, density determination, and recording of results.

18. Bulled animal chambers. This sequence shows the animal chambers, their contents, and location on ZERO island and in water near ZERO island.

19. Birds injured by detonation. The injured birds on Kirinian and Kuzin islands are shown in detail.

20. Also included in the motion picture sequence but taken by other crews under the direction of the TG 7.6 photographic liaison officer were:

    (a) Radiological operations aboard the MT MCKINLEY. This sequence shows the procedure on the ZERO days which occurred in the RadOps portion of that ship to include radex plots, cloud tracking, crater survey by plane, atoll survey by monitors at stations in the atoll and early fallout patterns. This sequence was covered in black and white movies, color movies, "still" pictures, and sound synchronized with the movies.

    (b) Drone operations at Eniwetok. This includes the actions of the monitors upon arrival at the air strip, the removal of the filter samples and monitoring of same, monitoring of planes and personnel and decontamination procedures used on the drone aircraft before they were again put into flying condition.

    (c) Monitor operation in connection with recovery of photography film at the photo towers on nearby islands and the lagoon photo tower.

Task Group 7.6 Activity at Kwajalein.

Task Unit 7.6.1 (Air Monitors) were stationed at Kwajalein during the tests. Their activities were documented by photographic crews attached to Task Group 7.4 under the direction of 1st Lt. Edward P. Radford, Jr. All of the activities of TU-7.6.1 were documented to include organization, interiors of operational planes, decontamination of personnel and equipment, briefing of personnel, calibration of instruments both at ground level and at high altitudes, and weather plotting. This phase is covered completely in the historical report insofar as pertinent data is concerned.

Disposition and Availability of Film.

All film was classified as "Top Secret" until exposed and viewed by a classification officer. This necessitated diligent search for storage space aboard the BAIROKO for both film and camera gear. It was finally decided that the safe in the Admiral's Cabin, which was being used by CTG-7.6 as a conference room, was suitable and film was stored in that safe throughout the operation. Also prominent were frequent inventory checks with a security representative of film on hand.

All "still" photographic film was sent to Bolling Field, Washington, D.C. for processing after which a print was forwarded to Herbert I. Miller aboard the USS ALBERMARLE. It was possible to view these prints and request copies to be included in reports to be compiled by members of TG-7.6. These prints are to be reviewed by a classification board before distribution.

Movie film is being processed and stored by the 1st Motion Picture Detachment, 8935 Wonderland Avenue, Los Angeles, California. It is expected that much film editing and production of training films will be done at that location.

Availability of Film.

At this time all of the film exposed during the operation of JTF-7 is under the control and supervision of the AEC. The photographic liaison officer of TG-7.6 has seen most of the "Still" photographs of TG-7.6 activity and has ordered prints of pertinent negatives to be released to the interested groups within TG-7.6 for the purpose of completing operational and scientific reports. The prints have not yet been released but the photographic liaison officer can be contacted at PO Box 1663, Los Alamos, New Mexico, for the status of pertinent photographs. He will forward photographs to the scientific groups within TG-7.6 according to existing security regulations.

Additional Activity.

On 29 March 1948 the finding of a Bikini floating film pack which was found in the surf off Engebi was photographed. A script was prepared for the sequence and the whole subject was forwarded to the classification section of JTF-7 for declassification and public release. The sequence involved Colonel James P. Cooney who participated in both the Bikini and Eniwetok tests not only in the placing of the film pack at Bikini but also in its recovery nearly two years later at Engebi.

ANNEX III

HEADQUARTERS
TASK GROUP 7.6
JOINT TASK FORCE SEVEN
U.S.S. BAIROKO (CVE-115)
Fleet Post Office
San Francisco, California

25 May 1948

[redacted] T

MEMORANDUM:

To: Commander, Joint Task Force SEVEN.

Subject: Requirements for Future Atomic Tests - Radiological Safety Group.

Enclosures: (A) Recommended Composition RadSafe Group.
(B) RadSafe instrument Stock Pile Recommendations.

1. This memorandum is forwarded in reply to the CJTF-7 Memorandum of 5 March 1948 which requests recommendations as to the composition and personnel of future Radiological Safety Groups.

2. Personnel. Enclosure (A) gives a recommended composition for future Radiological Safety Groups based on missions similar in scope to Operation SANDSTONE. The principal changes over the composition of Task Group 7.6 consists of an increase in the number of monitors and an increase in the clerical staff. Although the enclosure indicates a drastic increase in enlisted personnel over Task Group 7.6, this increase is more apparent than real. The effective enlisted strength of Task Group 7.6 was approximately three times the muster roll strength because of additional radiomen, boat crews and working parties. It is assumed that some service tests in connection with radiological safety and radiological defense will be conducted by the Radiological Safety Group, but the personnel and logistic requirements for this will depend entirely upon the scope of these tests and will be in addition to the recommendations for personnel and material contained herein.

3. Material. Certain radiological instruments should be stockpiled for these tests. They are listed in Enclosure (B). In general, the instruments used at SANDSTONE are suitable pilot models but in nearly every instance certain improvements are desireable

4. Technical RadSafe Report. Reference is made to the detailed "Technical Radiological Safety Report" which is being compiled by Task Group 7.6 and the Armed Forces Special

 [redacted]

28

Weapons Project with the concurrance of the Task Force Radiological Safety Officer and Scientific Director. This report will contain sections listing the detailed experience of Task Group 7.6 in Operation SANDSTONE, and is objectively developed for the assistance of future commanders of radiological safety groups in planning and coordinating their missions. This report will be submitted to the Scientific Director on 30 July 1948 and will be on file in the Armed Forces Special Weapons Project thereafter. It is pointed out that the following pertinent studies are included among other studies contained in the report:

(a) Standard table of equipment.
(b) Standard organization.
(c) Notes on field performance of RadSafe Instruments. (Including suggestions for improvements required by paragraph 3 above)
(d) Evaluation of radsafe training
(e) Evaluation of internal hazards from radiation.
(f) Decontamination of Aircraft.

5. Recommendations.

(a) The graduates of service radiological safety schools are considered to be trained at a proper level for duty as monitors in these very complex operations.
(b) Monitors for operations of this nature should, in general, be of officer class because of the experience gained at such operations, when superimposed upon the RadSafe School education, will produce our most experienced officers for radiological defense staff assignments. These opportunities for gaining operational experience should not be missed.
(c) Concurrent with the formation of plans for the primary operation, plans should also be made for the "roll up" operation. This should be specially stressed in the case of the radiological safety group for the following reasons:

(1) Service radiological safety personnel are generally unavailable for temporary duty periods of more than 120 days.
(2) The experience at Operation SANDSTONE indicates the need for early initiation of procurement of relief personnel in order to insure that they are on hand in time for adequate indoctrination prior to dissolution of the Radiological Safety Group.
(3) In general, a radiological "cooling off" period should be allowed between the actual atomic tests and the cleanup operations in instances

UNCLASSIFIED

[redacted]

where these operations are to be extensive in nature in order that hazards to personnel may be decreased by normal decay of short lived radioactive materials.

(4) Operations of this sort can be conducted with greater safety by employing personnel in small numbers with timely reliefs.

FRANK I. WINANT, JR.,
Commander, U.S. Navy,
Commander, Task Group 7.5

- -

FIRST INDORSEMENT

Radiological Safety Officer
Joint Task Force SEVEN

25 May 1948

To: Commander, Joint Task Force SEVEN.

1. Forwarded recommending approval.

2. The following recommendations are added:

(a) In Operation SANDSTONE the radiological safety group was organized and commanded separately from the scientific group. This was done with a view to insuring that the safety of personnel would not be subordinated to the urgency of recovery of scientific data. Although the conduct of the test showed no tendency to hazard personnel in procuring scientific data, it seems advisable, nevertheless, to reaffirm this command equality between the two groups as a sound principle.

(b) Certain studies of toxicity of radioactive materials should be initiated and carried through to completion prior to future tests in order to provide immediate and positive basic information for the Radiological Safety Officer and the Radiological Safety Group Commander. These should include studies of radioactively contaminated dust and water. The exact conditions of each test and any contemplated changes in weapon design should be considered in these studies.

(c) Experience at Operation SANDSTONE indicates the need for a variety of service tests which would contribute to the basic knowledge required for radiological safety and radiological defense.

[redacted]

[redacted]

Timely provision for conduct of these tests should be made and to this end it is recommended that an organization similar to the SANDSTONE Joint Proof Test Committee be perpetuated in order that the material bureaus and technical services and the Armed Forces Special Weapons Project may propose suitable tests and obtain approval in time for proper implementation. Experience indicates that this time lead may be as much as one year prior to the test.

J. P. COONEY
Colonel (MC)
Radiological Safety Officer

[redacted]

UNCLASSIFIED

RECOMMENDED COMPOSITION OF RADIOLOGICAL SAFETY GROUP

SECRET BASED ON EXPERIENCE AT OPERATION SANDSTONE

I OFFICER COMPLEMENT

DUTY	ARMY RANK OR EQUIVALENT	NUMBER
Commander	Colonel	1
Scientific and Medical Advisory Group	Lieutenant Colonel	4
Executive Officer	Lieutenant Colonel	1
R-1 Administration	Captain	1
R-2 Security Control	First Lieutenant	1
R-3 Operations Officer	Lieutenant Colonel	1
Asst Opers Officer	Major	1
Scheduling Officer	Captain	1
Reports	Captain or First Lieutenant	1
General Liaison	Major to First Lieutenant	4
R-4 Logistics Officer	Major (Quartermaster)	1
Air Log Officer	Captain or First Lieutenant	1
SS-1 Historian	Captain	1
Photographic Liaison	First Lieutenant	1
SS-2 Laboratory Officer	Lieutenant Colonel	1
Lab Assistants	Major to First Lieutenant	3
SS-3 Communications Off	Captain (Signal Corps)	1
Asst Comm Officer	First Lieutenant (SigC)	1
SS-4 Medical Records	Major (MC or MSC)	2
RadUnit #1 Ground Monitor	Major to Second Lieutenant	50
RadUnit #2 Air Monitor	Major to Second Lieutenant	35
RadUnit #3 Boat Pool	Lieutenant U.S. Navy	1
	Total Officers	114

SECRET

Enclosure (A)

UNCLASSIFIED

II ENLISTED COMPLEMENT

SECRET

	DUTY	RATE	NUMBER
	Staff Secretary	M/Sgt or YNC	1
R-1	Army & Air Admin	M/Sgt	1
	Navy & Marine Adm	PNC	1
	Stenographer	M/Sgt or YNC	2
	Clerk Typist	S/Sgt, Sgt or PN2, YN3	4
	Messenger		1
R-2	Security Con Clerk	S/Sgt or YN2	2
R-3	Oper Officer Sec	M/Sgt or YNC	1
	Report Off Sec	M/Sgt or YNC	2
	File Clerk	S/Sgt or YN2	1
	Draftsman	S/Sgt or DM2	2
	Scheduling Clerk	S/Sgt or YN2	2
R-4	Records	T/Sgt or PN1	1
	Procurement	T/Sgt or SK1	1
	Issue, Receipt, Store	SKC, SK1, ESK1, SK2, SA	5
SS-1	Historian Secretary	M/Sgt or YNC	1
	Clerk Typist	S/Sgt, Sgt or YN2, YN3	2
SS-2	Electronic Tech	M/Sgt or ETC	1
	Electronic Tech	T/Sgt or ET1	5
	Clerk Typist	S/Sgt or YN2	1
	Photo Dosimetry	M/Sgt or PHC	1
	Photographers	S/Sgt or PH2	4
	Photo Clerk Typist	Sgt or YN3	1
SS-3	NCO in Charge	M/Sgt or ETC	1
	Chief T&T	S/Sgt or ET2	1
	Chief Message Con	S/Sgt or TE2	1
	Radio Repairman	Sgt, T/4 or ET3	1
	Radio Operator (HS)	Cpl or RMSN	3
	Asst T&T	Cpl or ETSN	1
	Msg Center Clerk	Cpl or YNSN	3
	Radio Operator (HS)	T/5 or RMSN	8
	T&T Installer Rep	T/5 or ETSN	3
SS-4	Med Record Clerk	Sgt or HM3	1
	RadUnit #3 Boat Pool		20
	RadUnit #4 Utility Section		10
		Total Enlisted Personnel	96

SECRET

SECRET

RADSAFE INSTRUMENT STOCKPILE

RECOMMENDATIONS

In general, the field survey instruments used at SANDSTONE are suitable pilot models. Stock pile recommendations are for instruments similar to those now in manufacture but with improvements as indicated in the basic letter paragraph 4 (c). The manufacturers of existing instruments along with the manufacturers number are given.

I - FIELD INSTRUMENTS.

Dosimeter, Pocket Electrometer, 0-200mr A. O. Beckman Co. Cambridge Instrument Co. Kelly Koett - K-100	300
Dosimeter, Pocket Electrometer, 0-5-r None under manufacture	100
Dosimeter, Pocket Electrometer, 0-50r Kelly-Koett - K-160	20
Dosimeter Charger A. O. Beckman Co. Cambridge Instrument Co. Kelly-Koett, K-125	25
Geiger Mueller Survey Meter, Maximum range of 20 mr/hr Instrument Development Laboratories, 2610 National Technical Laboratories, MX-5 Victoreen Instrument Co., 263-A	100
Ionization Chamber Survey Meter with range of at least 2500 mr/hr National Technical Laboratories, MC-6 Victoreen Instrument Co., 247-A	85
Ionization Chamber Survey Meter for high range of 50,000 mr/hr Victoreen Instrument Co., 247-ASp(25,000 mr/hr)	15
Ionization Chamber Dosimeter with warning buzzer at 200 mr. National Technical Laboratories, M X-7	50

SECRET

Enclosure (B)

Dust Collector Mines Safety Appliances Co. Filter Queen Co.	8
Portable Alpha Survey Meter. No suitable type of alpha meter has been developed which will read against a high beta-gamma background.	25

II - LABORATORY INSTRUMENTS

Scale of 64 scaling circuits Instrument Development Laboratories	4
Counting Rate Meters General Radio Co., 1500	4
Esterline-Angus 5ma recorder	4
Photoelectric Densitometer Weston Electric Corp.	2
Alpha Proportional Counter Instrument Development Laboratories	2

[redacted]

ANNEX IV

TASK GROUP 7.6 OPERATIONAL REPORT

DISPATCHES

The following is a list of important dispatches pertaining to the activities of Task Group 7.6, Joint Task Force SEVEN:

7 April 1948

From: CJTF-7

Action: All TG Commanders

Info:

No one will look at the explosion through binoculars until after the flash has occured. To do so will cause permanent injury to the eyes.

9 April 1948

From: CTU 7.6.1

Action: CTG 7.6

Info:

Request clarification of BAKER 29 cloud tracking procedures regarding points of cloud contact. Operations order number 2 JTF 7 states that no aircraft except drone mother and photo aircraft will approach within 10 miles of cloud. Directions from your headquarters states "Contact will be considered as that point where the monitor obtains reading of 4 mr per hour". Request definite information for cloud tracking procedure.

11 April 1948

From: CTG 7.6

Action: CTU 7.6.1

Info:

The rule prohibiting aircraft except drone mothers and photo planes to approach within ten miles of cloud applies when atomic cloud is visible. The rule requiring planes turn back at four milliroentgens per hour

[redacted]

presumes entry into an invisible cloud or a fall-out area. For HOW plus 12 and later cloud trackers contact with a low intensity invisible cloud has been authorized in the total allowance exposure of 100 milliroentgens is not exceeded.

19 April 1948

From: CJTF-7

Action: All Task Group Commanders

Info:

Personnel of Task Group 7.1 will be allowed to work on Engebi in the area in which radiation intensity is less than 12.5 mr/hr for a period of 8 hours unaccompanied by a monitor in accordance with the following procedure: CTG 7.1 will be notified daily by CTG 7.6 as to the extent of this area and CTG 7.1 will inform all TG 7.1 working parties, who can accomplish their work in this area, of the extent of the area. CTG 7.6 will insure that there will be at least one monitor in this area to advise all individuals working under the above provisions. CTG 7.6 will provide for issue of film badges, pocket dosimeters and clothing as necessary at the landing area on Engebi. Upon returning all working parties will stop at the BAIROKO as it is not feasible to monitor personnel for contamination on Engebi due to high background.

20 April 1948

From: CTG 7.6

Action: CJTF-7

Info:

Perimeter island survey completed. Recommend long term closure of islands from Yeiri westward to southwest passage inclusive. These islands radioactive along beaches and in some cases show strong fall-out. Recommend temporary clearance of all other perimeter islands subject to routine checks. Recommend swimming permitted only on lagoon beaches of eastern islands. All islands are evidently subject to contamination by flotsam including dead fish and in some instances highly radioactive material.

3 May 1948

From: CJTF-7

Action: CTG-7.7

Info: CTU 7.6.1/CTG 7.6

Until further instructions avoid use of cachement water for drinking purposes. Cover all open water tanks. Istell select water samples and forward to CTG 7.6 for analysis by earliest possible air courier. Take water from sources as follows: (a) Tanks which must be used for drinking purposes. (b) Tanks suspected of highest contamination. (c) Samples from drinking water taps in galleys. Mark bottles clearly.

3 May 1948

From: CTU 7.6.1

Action: CTG 7.6

Info:

Rainfall began Kwajalein approximately 0300 hours 2 May. Background count 0900hours 25 counts per minute. 45 counts 1600 hours. 76 counts at 1835 hours. 127 counts at 1850 hours. 5 tenths mr per hour at 1900 hours. Gradual increase to 1,5 mr per hour at 2115 hours. Island Commander and Commander 7.4 advised to call off outdoor movies account inclement weather. Accomplished. If further increase in fall-out, will advise Commanders to keep all personnel under cover. Present reading beta plus gamma is 2 mr per hour. Gamma alone is approximately 5 tenths mr per hour. Initial island survey completed. Control center on 24 hour operation. Highest readings on Tarvia and fabric surfaces. Will keep you advised.

3 May 1948

From: CTG 7.7

Action: CJTF-7

Info: CTG 7.6

Attention invited that all natives drink rain water exclusively. To determine extent of contamination from yesterdays rain am collecting samples from Majuro, Likiep, Rongelap, Ujelang and Ujae. Rongelap samples will be sent to CTG 7.6 for analysis. Request test and report be expedited all possible.

3 May 1948

From: CTG 7.6

Action: CTG 7.7

Info: CJTF-7

[redacted]

All water samples received are satisfactory repeat satisfactory. This includes distilled Army mess, DOG area, ATC mess, general Navy mess, Navy officer mess, Navy pharmacy. Also brackish MEQ 44, Army area ATC, MEQ 46 Navy, Navy dispensary, Army general mess. Also cachement MEQ 11 Navy, Navy area, MEQ 46 Navy, MEQ 44 Navy. All show enormous factor of safety.

6 May 1948

From: CTG-7.6

Action: CJTF-7

Info: CTG-7.1/CTU 7.1.1

Reference Field Order Number ONE Annex JIG paragraph four item. In order reduce administrative load recommend change of reports to addees. Minor overexposures will be reported after two day lag with adjustment for 100 mr daily recovery.

12 May 1948

From: CJTF-7

Action: CTG-7.4

Info: CTG-7.6 / CTU 7.6.1

Drone aircraft may depart for US at such time as their maximum reading in the aircraft reaches 16 mr/hr providing that a 24 hour layover at Honolulu and Fairfield be authorized.

17 May 1948

From: CTG-7.3

Action: CTU-7.3.7

Info: CJTF-7 / CTG-7.6

CTG-7.6 advises that LCM which was assigned to TG-7.6 for scientific use is contaminated and not available for future use. Arrange direct with CTG-7.6 to obtain this LCM from present anchorage off Runit. Tow LCM to deep water in lagoon clear of cable area and sink this LCM repeat LCM. Survey LCM in accordance Annex DOG CTG-7.3 Op Plan 1-48. Comply with all radsafe instructions given by CTG-7.6

[redacted]

[redacted]

UNCLASSIFIED

18 May 1948

From: CTG-7.6

Action: CTG-7.3

Info:

Pass to Cooney. Radiological inspection of ships generally satisfactory with one common definiency noted. Inlet screens of high capacity supply blowers were generally contaminated. Suggest these screens be removed and scrubbed with soap and water tomorrow with monitor recheck on Thursday. If day wire brushing or air blasting is employed recommend workers wear gas masks or respirators. Caution against employment of persons with cuts on hands.

20 May 1948

From: CTG-7.6

Action: CJTF-7

Info: CTG 7.1/CTG-7.2/CTG-7.3/CTG-7.4/CTG-7.5/CTG-7.7/CTU-7.3.2

All operations scheduled for Runit and islands to northward under surveillance of this Task Group have been completed and personnel evacuated. Radiological survey of all ships this area completed. Departure this Task Unit is scheduled for 201925Z. Therefore recommend responsibility for radiological safety of Eniwetok atoll and ships remaining be transferred to Commander Eniwetok Atoll effective 201200Z. Captain Mallory now at Eniwetok is acting as post surgeon and Radiological Safety Officer until arrival of Major Buthus. Cooney concurs and ZEBRA plus 15 Radsafe Status Report is in mail with copy to Garrison Commander.

20 May 1948

From: CTG-7.6

Action: CTG-7.3

Info: CJTF-7

Reference is made to the U.S. Navy radiological Safety Regulations. Vessels of the Task Force have been monitored at points where maximum contamination might be expected to occur including evaporators, auxiliary condensers, weather decks, berth decks, intake screens of high capacity supply blowers, ventilation ductelbows and in the case of vessels anchored

[redacted]

[redacted]

within five miles of test area scrapings from hull near waterline. Ships checked include:

(a) MT MCKINLEY, ALBEMARLE, CURTISS, BAIROKO, COMSTOCK, GARDINERS BAY, PICKAWAY, MISPILLION, ASKARI, TUCKER, ROGEERS, SPANGLER, YANCY, RABY, PASIG, LSM 378, LSM 250, LST 45, LCI 1054, PBM 50250, PBM 59155, PBM 84602, PBM 84623.

(b) PERKINS, GEORGE, MARSH, CURRIER, FS 370, YW 94, YOG 64, LCI 1000, LCI 540, AVR 26653, AVR 26638.

with exceptions below no readings have been found greater than point zero zero five roentgens per twenty four hours above background and ships therefore appear eligible for final clearance jointly by BuShips and BuMed in accordance with the reference. Exceptions are as follows: All ships in para, ABLE with high and intermediate capacity supply blowers show readings on inlet screens which after scrubbing persist at levels up to normal tolerance. This also applies to Number One five inch gun on SPANGLER and three air conditioning units on CURTISS. Suggest that inlet screens to supply blowers on Para. ABLE ships be scraped to bare metal, repainted and monitored on arrival at a Navy Yard. Ships in Para. BAKER show no exception. Cooney concurs stating there is no radioactive hazard to personnel on any ship.

[redacted]

[redacted]

ANNEX V

JOINT TASK FORCE SEVEN
U.S.S. MT MT KINLEY (AGC-7)
Fleet Post Office
San Francisco, California

20 May 1948

SUBJECT: Eniwetok Atoll - Radiological Status Report.

TO: Commander, Joint Task Force SEVEN.

1. All islands of Eniwetok Atoll were surveyed for radioactivity during the period 17 to 19 May 1948. During Operation SANDSTONE much of the land mass of the Atoll was contaminated with significant amounts of radioactivity. For practical purposes the degree of contamination is divided into four classes.

A. Class I - Zero Islands.
These are islands on which tests were conducted and consequently have highly contaminated craters. The crater is defined as a disk shaped area, radius 400 yards, centered at the zero tower base. The three islands should be considered as uninhabitable for a period of years. Radiochemical analyses of dirt samples would be required before considering any extensive re-use of these islands. Monitors should accompany any parties working in these craters.

Class I Islands are as follows:

Engebi
Aomen
Runit

B Class II - Islands Heavily Contaminated from Fall-out.
Several islands downwind of the zero islands were heavily contaminated by fall-out of radioactive materials following the various tests. Until final clearance, every group re-entering these islands should be accompanied by a monitor. There should be no extensive re-use or occupation until a thorough and satisfactory re-survey and radiochemical analysis has been conducted.

Class II Islands -

Piiraai	Yeiri
Aaraanbiru	Bokonaarappu
Rojoa	Kirinian
Biijiri	Muzinbaarikku

[redacted]

30

[redacted]

ANNEX V

JOINT TASK FORCE SEVEN
U.S.S. MT MT KINLEY (AGC-7)
Fleet Post Office
San Francisco, California

20 May 1948

SUBJECT: Eniwetok Atoll - Radiological Status Report.

TO: Commander, Joint Task Force SEVEN.

1. All islands of Eniwetok Atoll were surveyed for radioactivity during the period 17 to 19 May 1948. During Operation SANDSTONE much of the land mass of the Atoll was contaminated with significant amounts of radioactivity. For practical purposes the degree of contamination is divided into four classes.

A. Class I - Zero Islands.
These are islands on which tests were conducted and consequently have highly contaminated craters. The crater is defined as a disk shaped area, radius 400 yards, centered at the zero tower base. The three islands should be considered as uninhabitable for a period of years. Radiochemical analyses of dirt samples would be required before considering any extensive re-use of these islands. Monitors should accompany any parties working in these craters.

Class I Islands are as follows:

Engebi
Aomen
Runit

B Class II - Islands Heavily Contaminated from Fall-out.
Several islands downwind of the zero islands were heavily contaminated by fall-out of radioactive materials following the various tests. Until final clearance, every group reentering these islands should be accompanied by a monitor. There should be no extensive re-use or occupation until a thorough and satisfactory re-survey and radiochemical analysis has been conducted.

Class II Islands -

Piiraai	Yeiri
Aaraanbiru	Bokonaarappu
Rojoa	Kirinian
Biijiri	Muzinbaarikku

[redacted]

30

Eberiru	Bogon
Rujoru	Engebi (outside of crater)
Aitsu	Aomen (" " ")

C. Class III - Islands Lightly Contaminated from Fall-out.

Several islands in the northwest section of the atoll were contaminated from fall-out to a lesser degree than those listed under Class II. Only limited operations should be permitted for the next few weeks. For such operations a monitor would not be necessary unless dust producing operations were conducted. Extensive re-survey and radiochemical analysis should be conducted before any of these islands were opened for permanent occupancy.

Class III Islands -

Bogairikk	Ruchi
Teiteiripucchi	Bogombogo
Elugelab	Bogallum
Beacon "N"	Runit (outside of crater)

D. Class IV - Uncontaminated Islands.

The islands of the southern half of Eniwetok Atoll received no fall-out or other contamination and should be considered as cleared for all types of operations and permanent occupancy if desired.

Class IV Islands -

Chinicero	Igurin
Aniyaanii	Mui
Chinimi	Pokon
Japtan	Ribaion
Parry	Giriinian
Eniwetok	Rigili

2. For the use of the radiological safety officer of the Eniwetok Garrison Command, AEC material was transferred on 17 May 1948 to Supply Officer, Task Group 7.2 as follows:

Silica Gel Bags	1 Box
Personnel Film Badges	216 each
Instruction Books for:	
263A counters	2 each
Dosimeters	2 each
Vacuum Tubes:	
VX-41A	10 each
2E35	4 each
2532	4 each
GM Tubes	15 each

301

[redacted]

Flashlite Batteries 1.5 v	96 each
No. 467 67.5 v batteries	50 each
No. 493 300 v batteries	50 each
No. 4F 1.5 v batteries	20 each
Minimax, 22.5 v batteries	96 each
B2BP 3 v batteries	18 each
Charging Kit batteries Minimax	9 sets
Simpson Test Meter, plus leads (Model 260)	1 each
Radium buttons	2 each
Crystal headsets	5 each
Keleket Charging Units	2 each
Keleket .2 r dosimeters	20 each
MX-6 Ion Chambers	2 each
263A survey instruments	5 each
MX-6 (Zeus) covers	6 each
263A covers	15 each

One calibration source (Cobalt) will be delivered prior departure of U.S.S. BAIROKO. This should be kept in a safe and should be shielded by three inches of lead.

3. Captain Meredith Mallory, Jr., MC, USA, of TG-7.6 will remain at Eniwetok on temporary duty until 1 June 1948 to monitor any necessary operations during the turn-over period. Major Butkus, MC, USA, has been ordered from AFSWP to Eniwetok as Radiological Safety Officer and Post Surgeon to arrive about 1 June 1948.

4. It is recommended that gas masks be worn for all dust producing operations on all islands listed under Classes I, II and III.

5. It is further recommended that upon completion of any operations or visit to any island except those listed under Class IV all personnel and equipment involved be monitored for contamination.

JAMES P. COONEY,
Colonel, MC,
Radiological Safety Officer
Joint Task Force SEVEN

Copies to:
Eniwetok Garrison Commander
Garrison RadSafe Officer
TG-7.6 file (2)

[redacted]

[redacted]

Flash	
No. 4 lite batteries 1.5 v	96 each
No. 4557 67.5 v batteries	50 each
No. 4F3 300 v batteries	50 each
Minimax 1.5 v batteries	20 each
N2MP 22.5 v batteries	96 each
Charging 3 v batteries	18 each
Minimax Kit batteries,	9 sets
Simpson Test Meter, plus leads (Model 260)	1 each
Radiac Dosimeters	2 each
Crystal headsets	5 each
Kelekot Charging Units	2 each
Kelekot charging Units	20 each
IM-6 Ion chamber dosimeters	2 each
263A survey instruments	5 each
IM-6 (Geiger) instruments	6 each
263A covers	15 each

One calibration source (C[illegible]lt) will be delivered prior departure of U.S.S. BAIROKO. This should be kept in a safe and should be shielded by three inches of lead.

3. Captain Meredith Mallory, Jr., MC, USA, of T.G. 7.6 will remain at Eniwetok on temporary duty until 1 June 1948 to monitor any necessary operations during the turn-over period. Major Dutia MC, USA, has been ordered from AFMP to Eniwetok as Radiological Safety Officer and Post Surgeon to arrive about 1 June 1948.

4. It is recommended that gas masks be worn for all dust producing operations on all islands listed under Classes I, II and III.

5. It is further recommended that upon completion of operations or visit to any island except those listed under IV, all personnel and equipment involved be monitored for contamination.

JAMES P. CONNAY,
Colonel, MC,
Radiological Safety Officer
Joint Task Force SEVEN.

Copies to:
Eniwetok Garrison Commander
Garrison RadSafe Officer
TG 7.6 file (2)